US009127910B2

(12) **United States Patent**
Volfson

(10) **Patent No.: US 9,127,910 B2**
(45) **Date of Patent: Sep. 8, 2015**

(54) **CROSSWIND SPEED MEASUREMENT BY OPTICAL MEASUREMENT OF SCINTILLATION**

(71) Applicant: **Leo Volfson**, San Diego, CA (US)

(72) Inventor: **Leo Volfson**, San Diego, CA (US)

(73) Assignee: **Torrey Pines Logic, Inc.**, San Diego, CA (US)

(*) Notice: Subject to any disclaimer, the term of this patent is extended or adjusted under 35 U.S.C. 154(b) by 264 days.

(21) Appl. No.: **13/870,828**

(22) Filed: **Apr. 25, 2013**

(65) **Prior Publication Data**

US 2015/0008260 A1 Jan. 8, 2015

Related U.S. Application Data

(60) Provisional application No. 61/669,516, filed on Jul. 9, 2012.

(51) **Int. Cl.**

G06F 19/00	(2011.01)
F41G 3/08	(2006.01)
G01S 17/95	(2006.01)
G01S 17/10	(2006.01)
G01S 17/58	(2006.01)

(52) **U.S. Cl.**

CPC ***F41G 3/08*** (2013.01); ***G01S 17/107*** (2013.01); ***G01S 17/58*** (2013.01); ***G01S 17/95*** (2013.01)

(58) **Field of Classification Search**

CPC G06G 7/80; F41G 3/065; F41G 3/08

USPC 235/404, 405

See application file for complete search history.

(56) **References Cited**

U.S. PATENT DOCUMENTS

4,028,673	A *	6/1977	Taylor et al.	382/100
4,182,570	A *	1/1980	Courrier et al.	356/28
6,247,259	B1 *	6/2001	Tsadka et al.	42/114
7,005,971	B2 *	2/2006	Stewart et al.	340/332
7,739,823	B2	6/2010	Shapira et al.	
8,279,423	B2	10/2012	Shapira	

* cited by examiner

Primary Examiner — Daniel St Cyr

(74) *Attorney, Agent, or Firm* — Fish & Richardson P.C.

(57) **ABSTRACT**

The present disclosure describes methods and systems for measuring crosswind speed by optical measurement of laser scintillation. One method includes projecting radiation into a medium, receiving, over time, with a photodetector receiver, a plurality of scintillation patterns of scattered radiation, comparing cumulative a radiation intensity for each received scintillation pattern of the received plurality of scintillation patterns, and measuring a cumulative weighted average cross-movement within the medium using the compared cumulative radiation intensities.

23 Claims, 17 Drawing Sheets

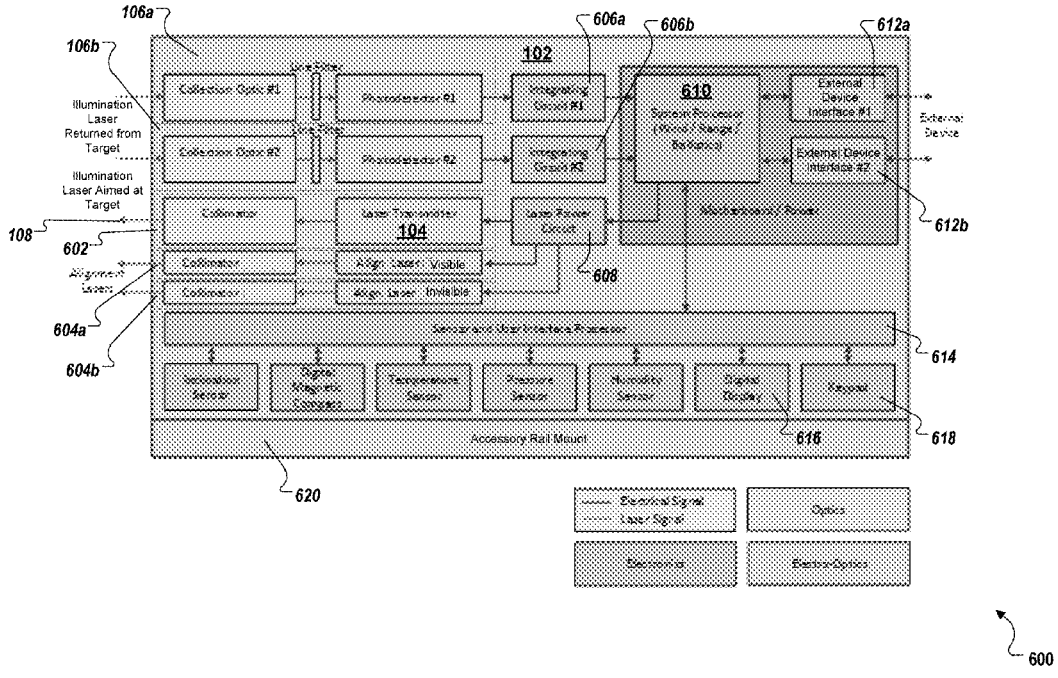

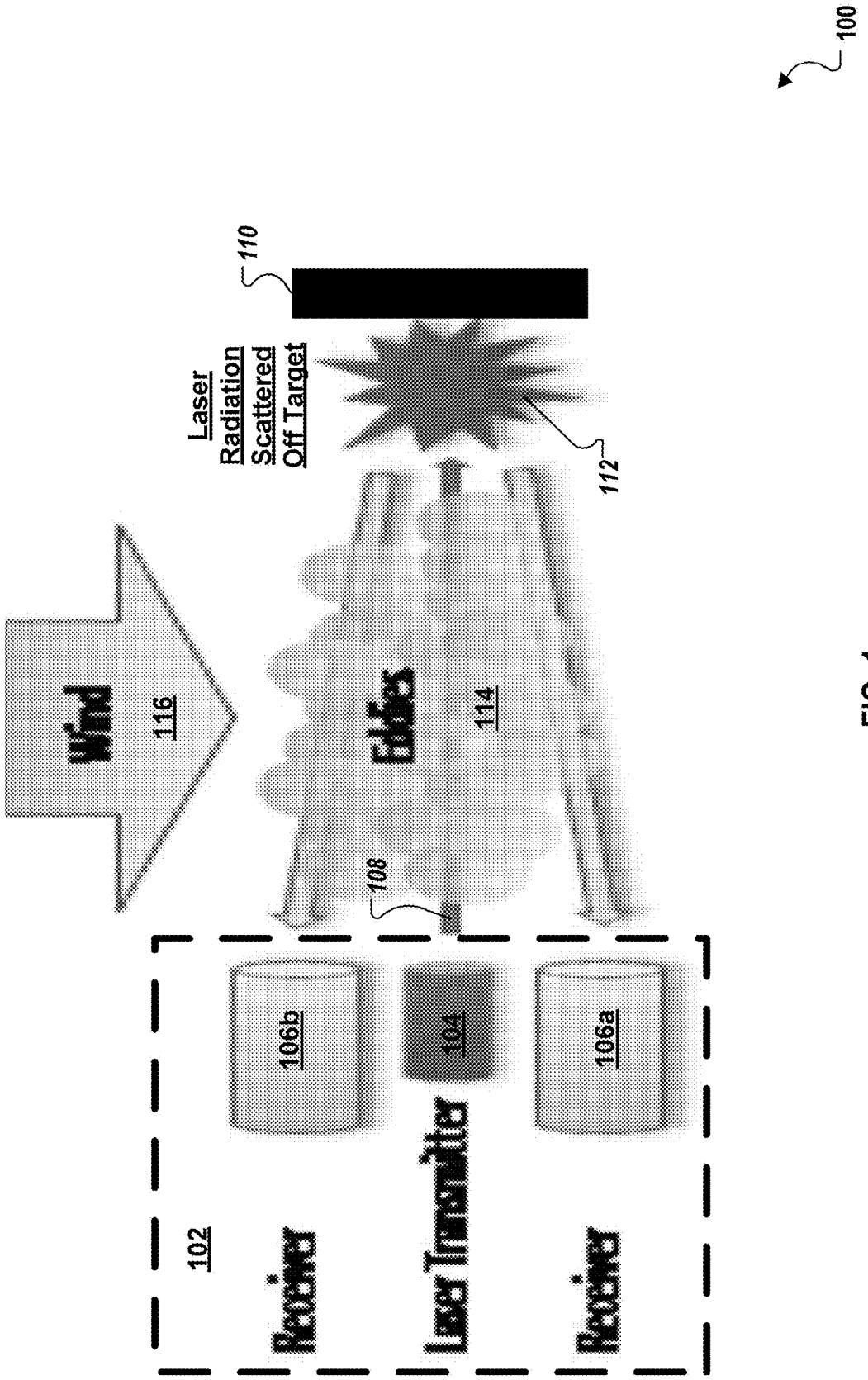
100
110
Laser Radiation Scattered Off Target
112
Wind
116
Eddies
114
108
102
Receiver
Laser Transmitter
Receiver
106b
104
106a

FIG. 1

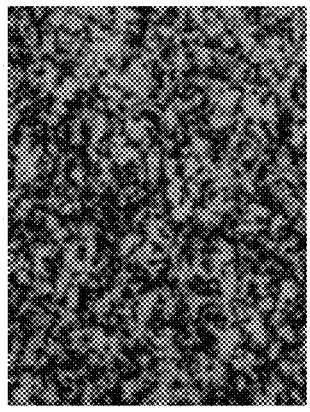

FIG. 2

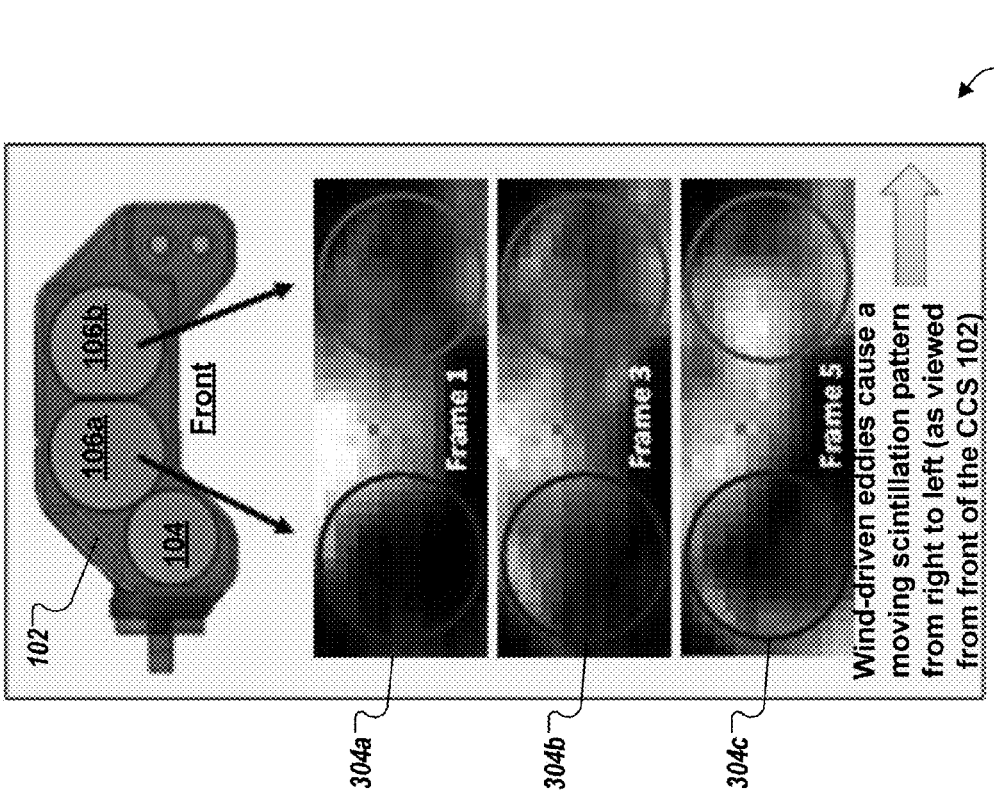

FIG. 3

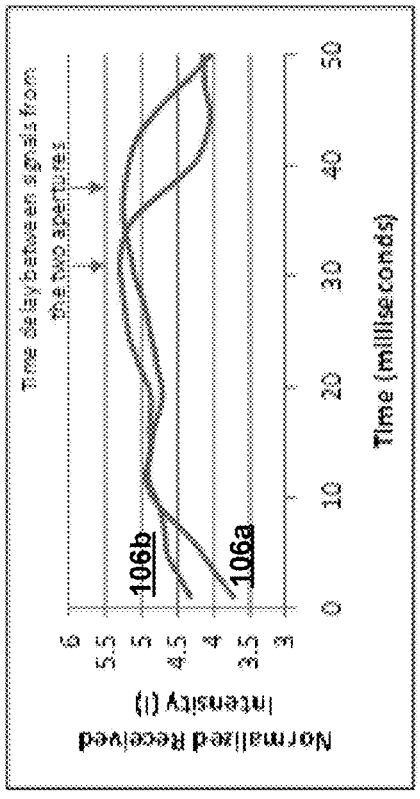

FIG. 4

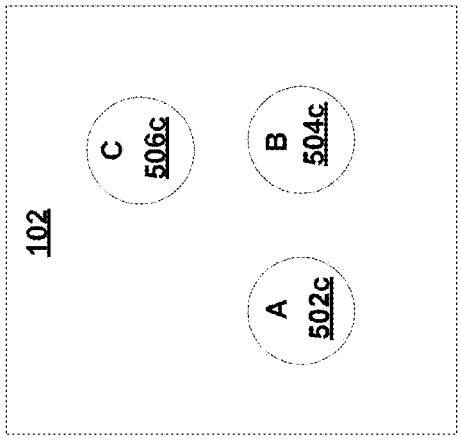

FIG. 5C

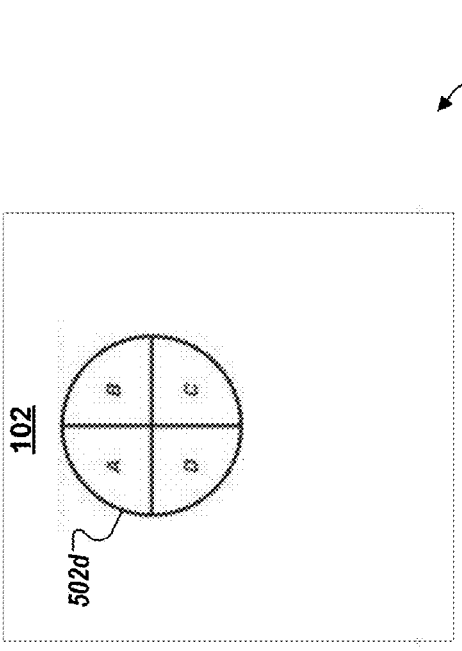

FIG. 5D

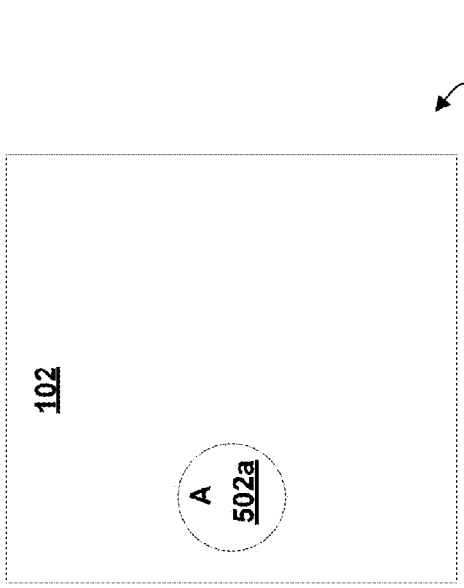

FIG. 5A

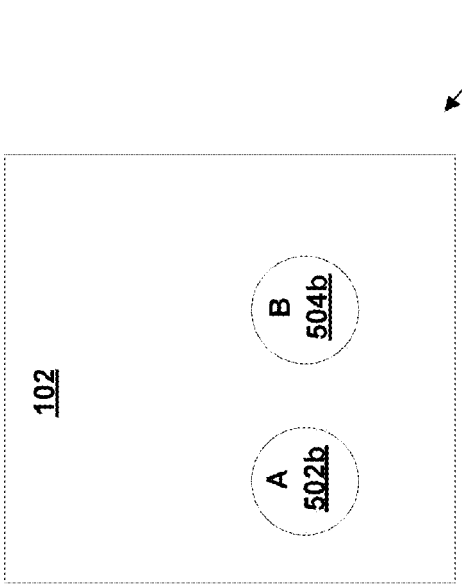

FIG. 5B

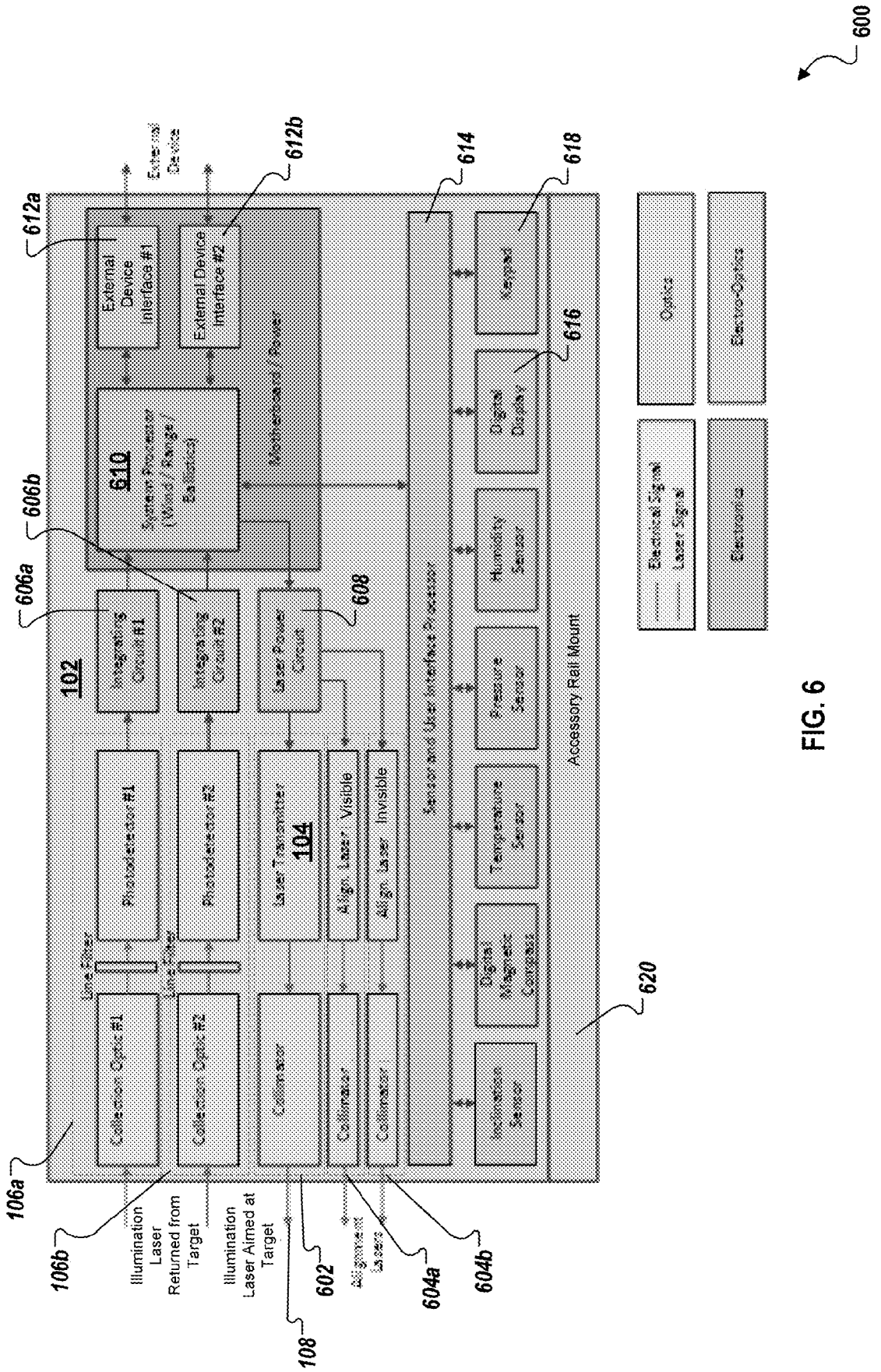
600
External Device
612a
612b
614
618
External Device Interface #1
External Device Interface #2
Motherboard / Power
610
System Processor (Wind / Range / Ballistics)
606b
606a
102
Integrating Circuit #1
Integrating Circuit #2
Laser Power Circuit
608
Photodetector #1
Photodetector #2
Laser Transmitter
104
Align. Laser Visible
Align. Laser Invisible
Line Filter
Line Filter
Collection Optic #1
Collection Optic #2
Collimator
Collimator
Collimator
Sensor and User Interface Processor
Keypad
616
Digital Display
Humidity Sensor
Pressure Sensor
Temperature Sensor
Digital Magnetic Compass
Inclination Sensor
Accessory Rail Mount
620
106a
106b
Illumination Laser Returned from Target
Illumination Laser Aimed at Target
602
Alignment Lasers
604a
604b
108
Optics
Electro-Optics
Electrical Signal
Laser Signal
Electronics

FIG. 6

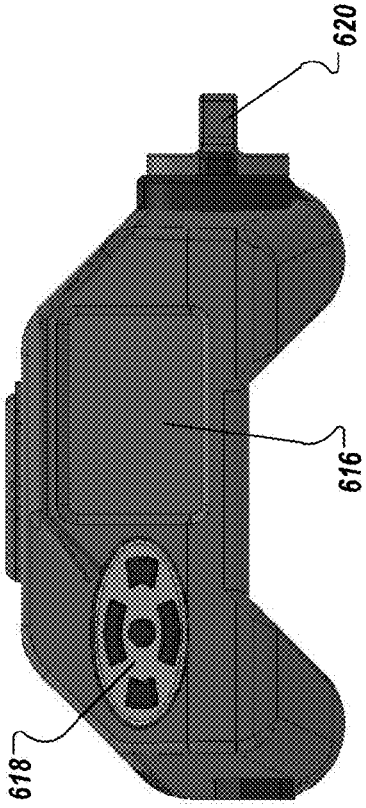

700b

FIG. 7B

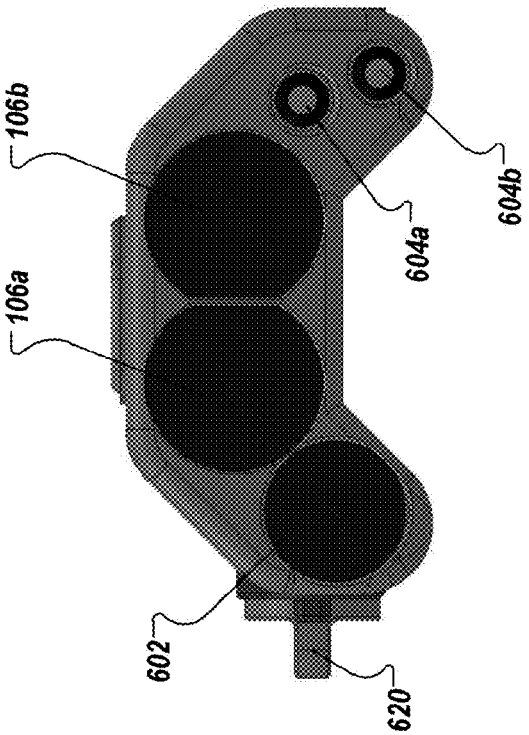

700a

FIG. 7A

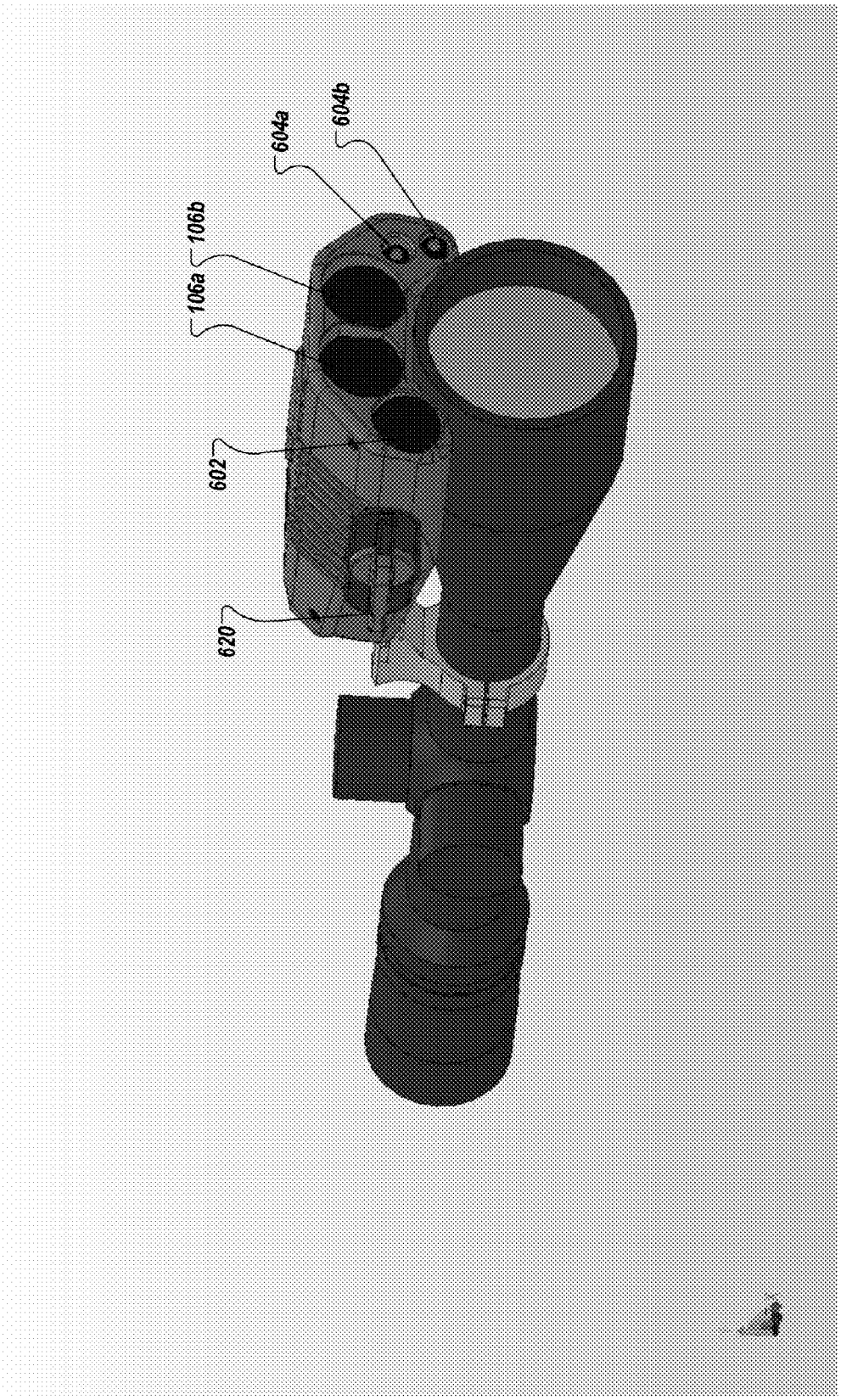

FIG. 7C

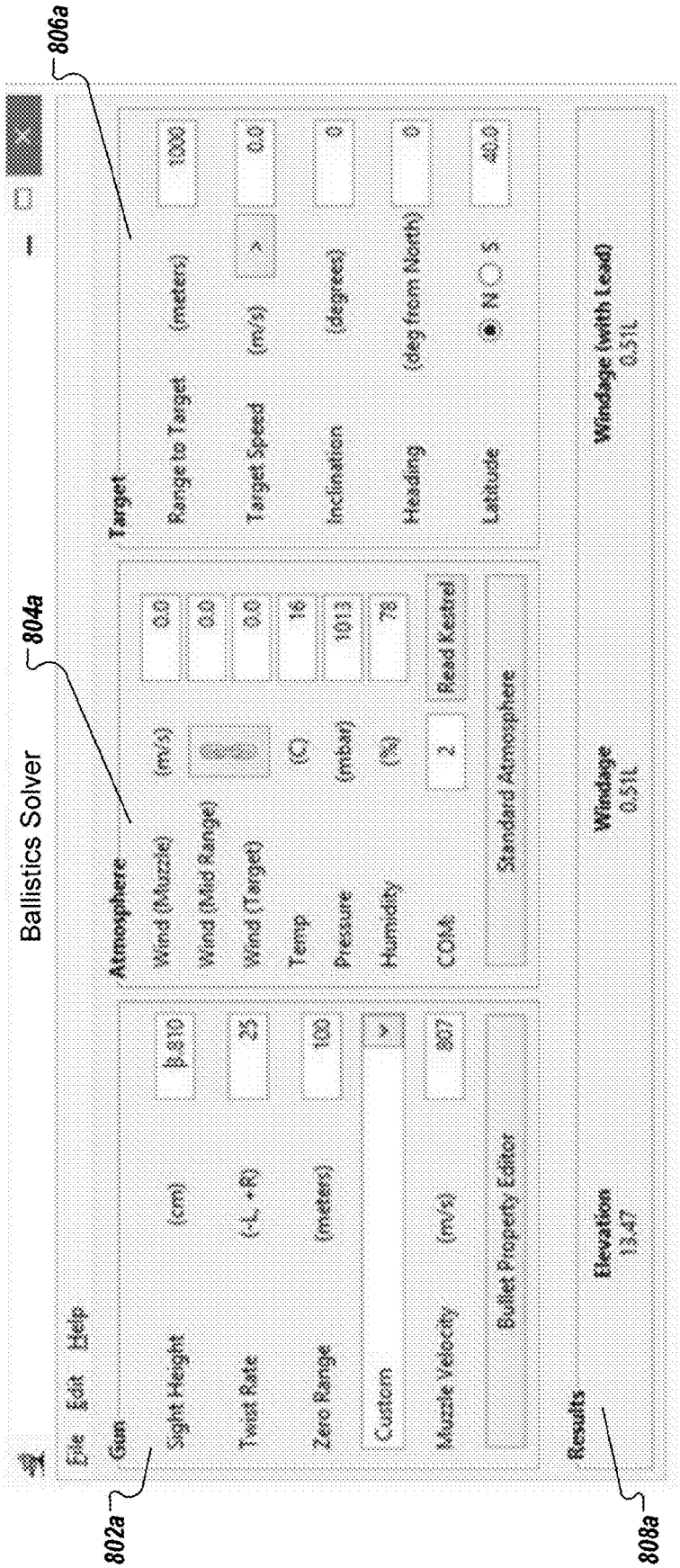
806a
800a
Ballistics Solver
804a
File Edit Help
Gun
Sight Height (cm)
Twist Rate (+L, -R)
Zero Range (meters)
Custom
Muzzle Velocity (m/s)
Bullet Property Editor
Atmosphere
Wind (Muzzle) (m/s)
Wind (Mid Range)
Wind (Target)
Temp (C)
Pressure (mbar)
Humidity (%)
COM
Read Kestrel
Standard Atmosphere
Target
Range to Target (meters)
Target Speed (m/s)
Inclination (degree)
Heading (deg from North)
Latitude
N S
Windage
0.51L
Windage (with Lead)
0.51L
Elevation
13.47
Results
802a
808a

FIG. 8A

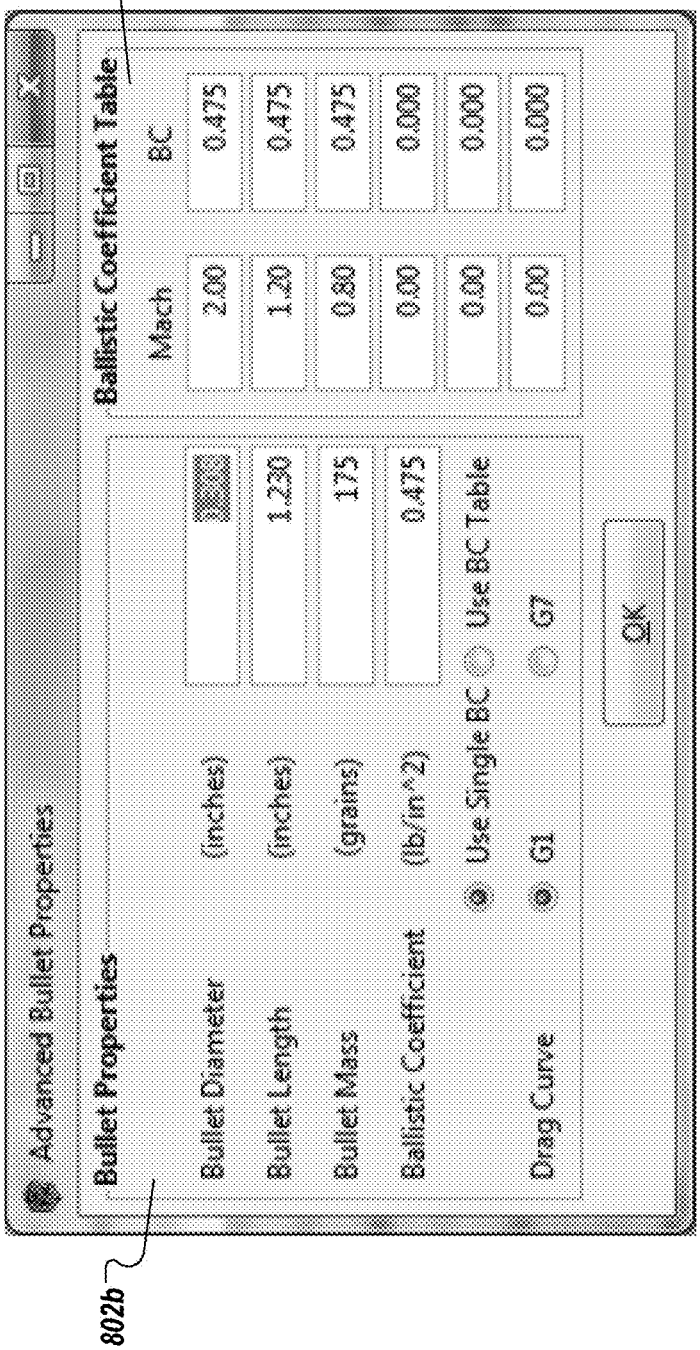
800b
804b
802b
Advanced Bullet Properties
Bullet Properties
Bullet Diameter (inches)
Bullet Length (inches)
Bullet Mass (grains)
Ballistic Coefficient (lb/in^2)
Use Single BC
Use BC Table
Drag Curve
G1
G7
OK
Ballistic Coefficient Table
Mach
BC
2.00
1.20
0.80
0.00
0.00
0.00
0.475
0.475
0.475
0.000
0.000
0.000
1.230
175
0.475

FIG. 8B

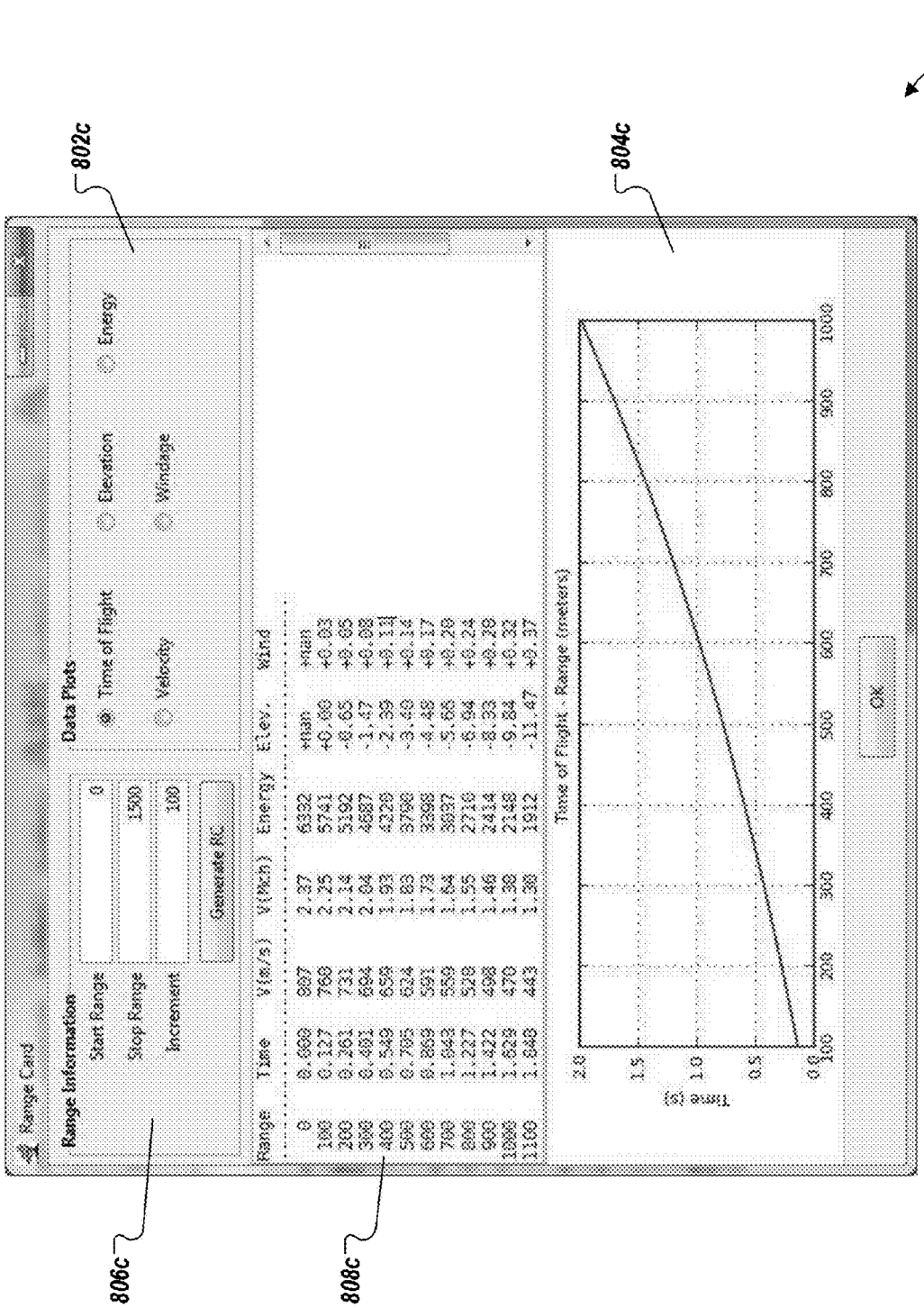
800c
802c
804c
806c
808c
Range Card
Range Information
Start Range
0
Stop Range
1500
Increment
100
Generate RC
Data Plots
Time of Flight
Elevation
Energy
Velocity
Windage
Range Time V(ft/s) V(Mach) Energy Elev. Wind
0 0.000 807 2.37 6332 +0.00 +0.00
100 0.127 760 2.25 5741 +0.00 +0.03
200 0.261 721 2.14 5192 -0.65 +0.05
300 0.401 684 2.04 4687 -1.47 +0.08
400 0.549 650 1.93 4226 -2.39 +0.11
500 0.705 624 1.83 3798 -3.40 +0.14
600 0.869 591 1.73 3398 -4.48 +0.17
700 1.043 559 1.64 3027 -5.65 +0.20
800 1.227 528 1.55 2716 -6.94 +0.24
900 1.422 498 1.46 2414 -8.33 +0.28
1000 1.629 470 1.38 2148 -9.84 +0.32
1100 1.848 443 1.30 1912 -11.47 +0.37
Time of Flight - Range (meters)
Time (s)
2.0
1.5
1.0
0.5
0.0
100
200
300
400
500
600
700
800
900
1000
OK

FIG. 8C

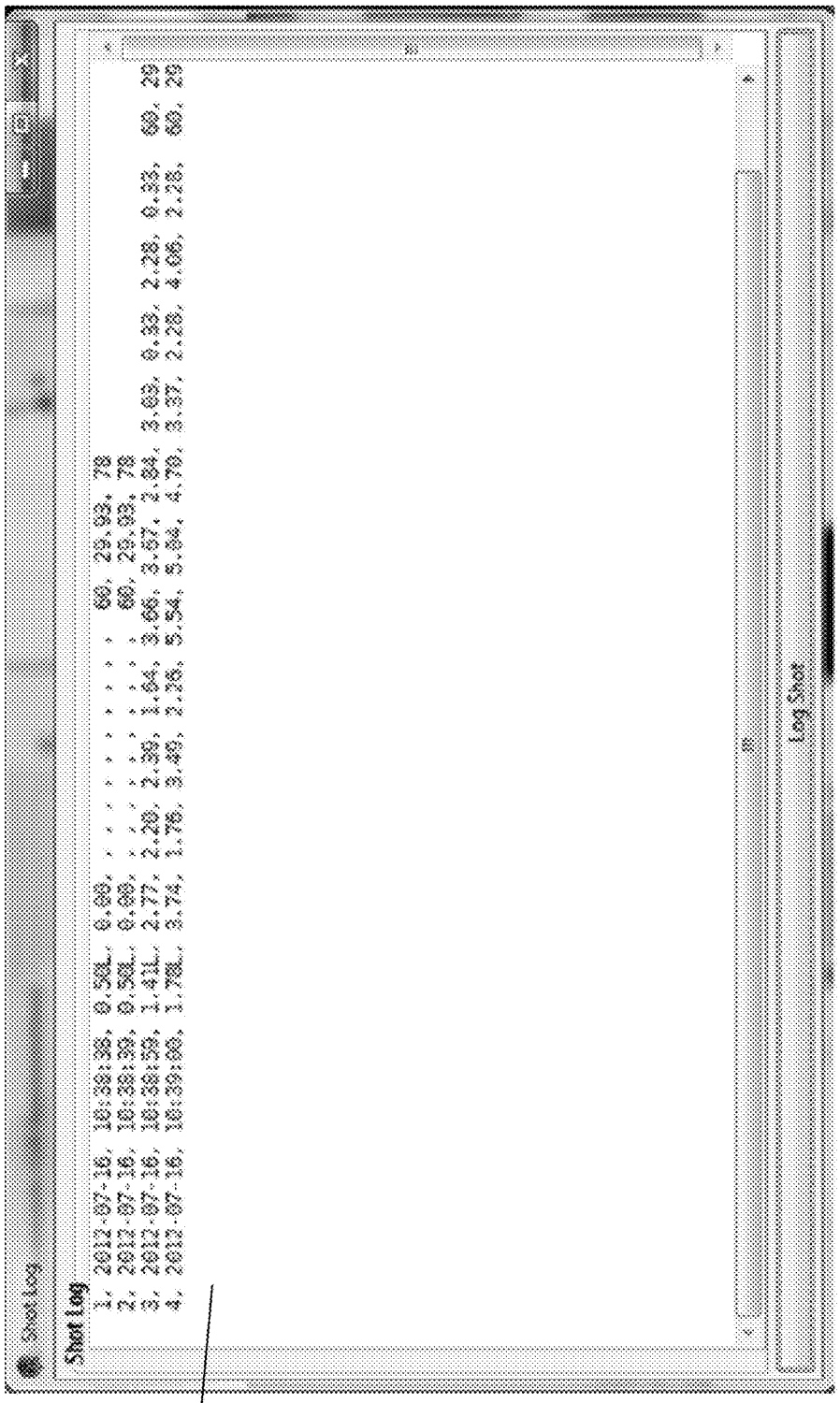
800d
802d
Shot Log
Log Shot
Shot Log
1, 2012-07-16, 10:38:36, 0.50L, 0.00, , , , , , , , , 60, 29.93, 78
2, 2012-07-16, 10:38:38, 0.50L, 0.00, , , , , , , , , 60, 29.93, 78
3, 2012-07-16, 10:38:59, 1.41L, 2.77, 2.20, 2.39, 1.64, 3.66, 3.67, 2.84, 3.03, 0.33, 2.28, 0.33, 60, 29
4, 2012-07-16, 10:39:00, 1.78L, 3.74, 1.76, 3.46, 2.26, 5.54, 5.84, 4.70, 3.37, 2.28, 4.06, 2.28, 60, 29

FIG. 8D

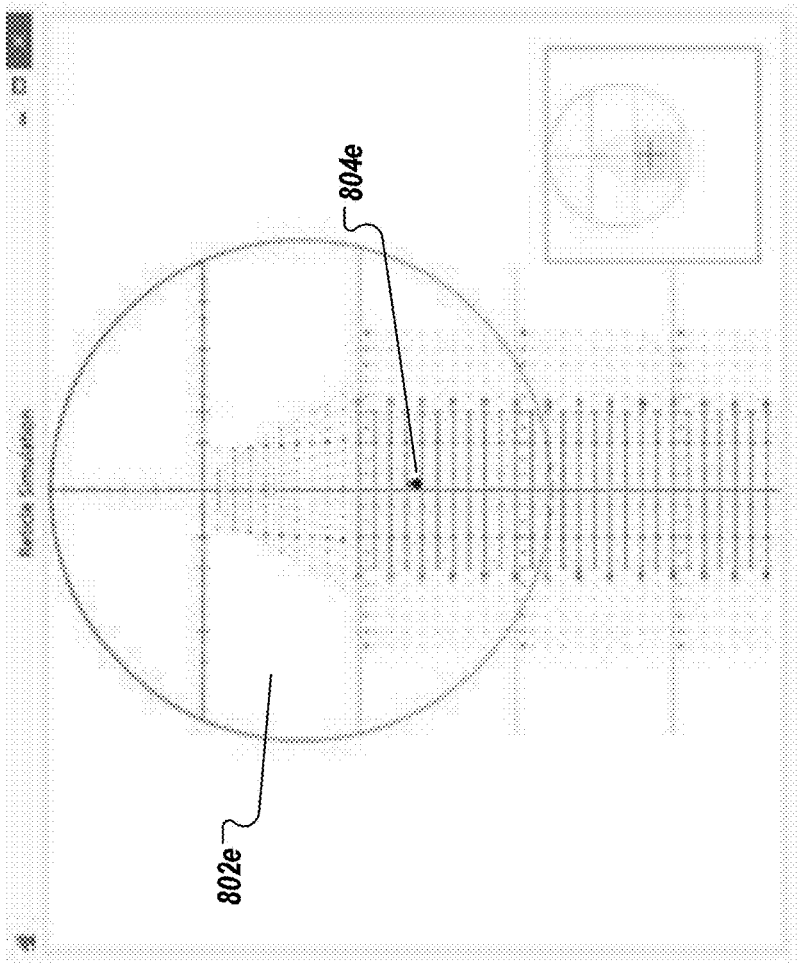

FIG. 8E

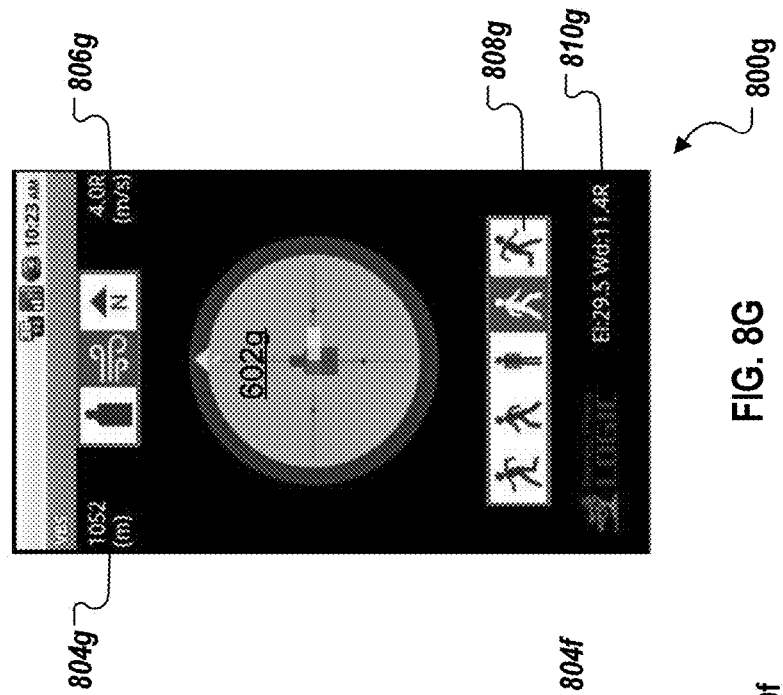
806g
808g
810g
800g
804g
10:23 AM
4.0R (m/s)
1052 (m)
602g
El:29.5 Wd:11.4R

FIG. 8G

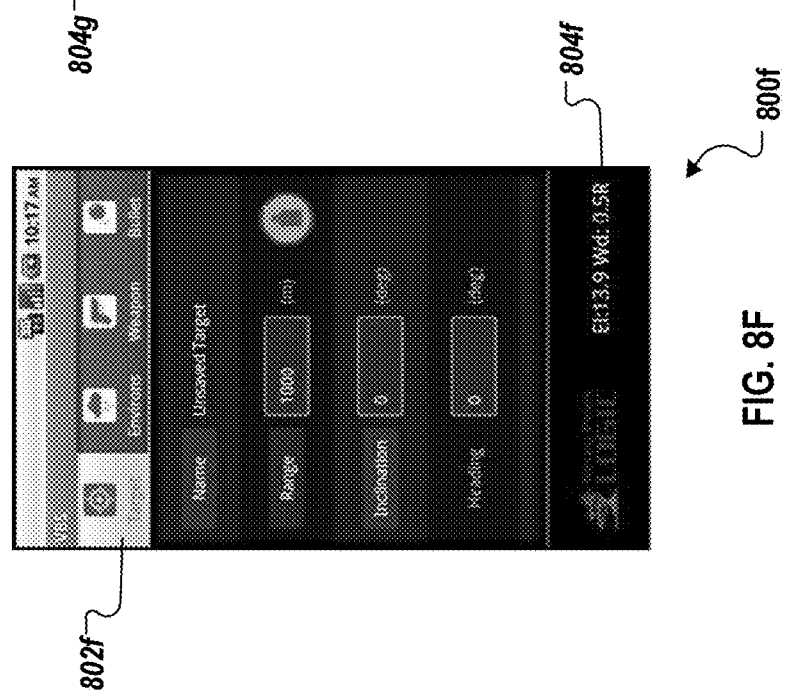
804f
800f
802f
10:17 AM
Unsaved Target
Name
Range
Inclination
Heading
El:13.9 Wd: 0.5R

FIG. 8F

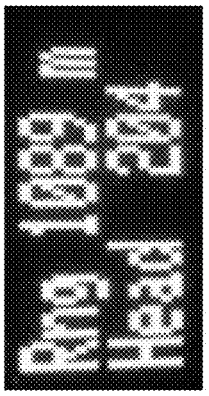

FIG. 9B

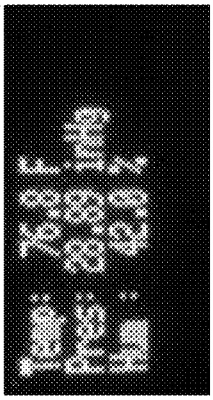

FIG. 9D

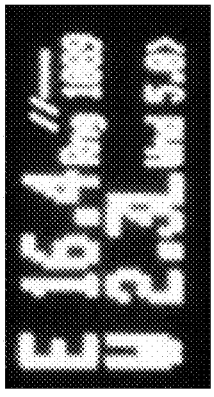

FIG. 9A

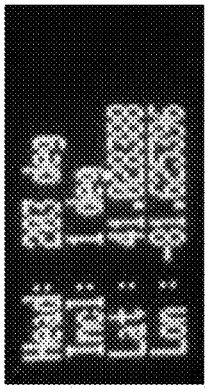

FIG. 9C

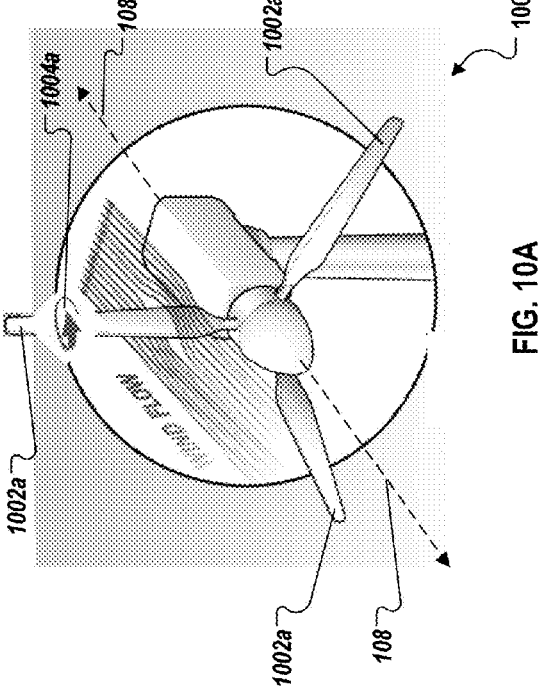

FIG. 10A

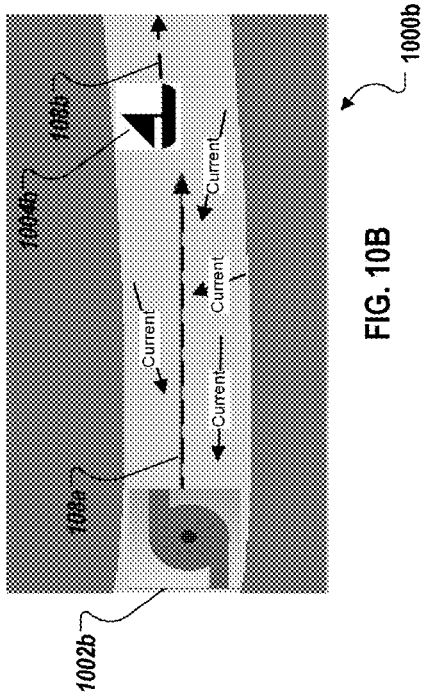

FIG. 10B

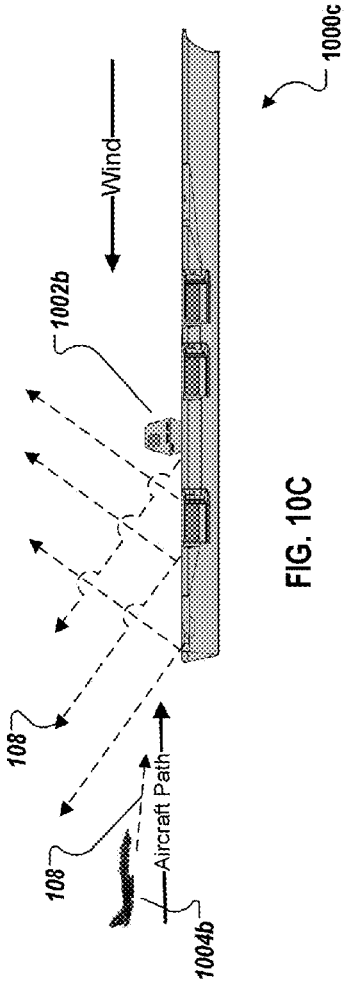

FIG. 10C

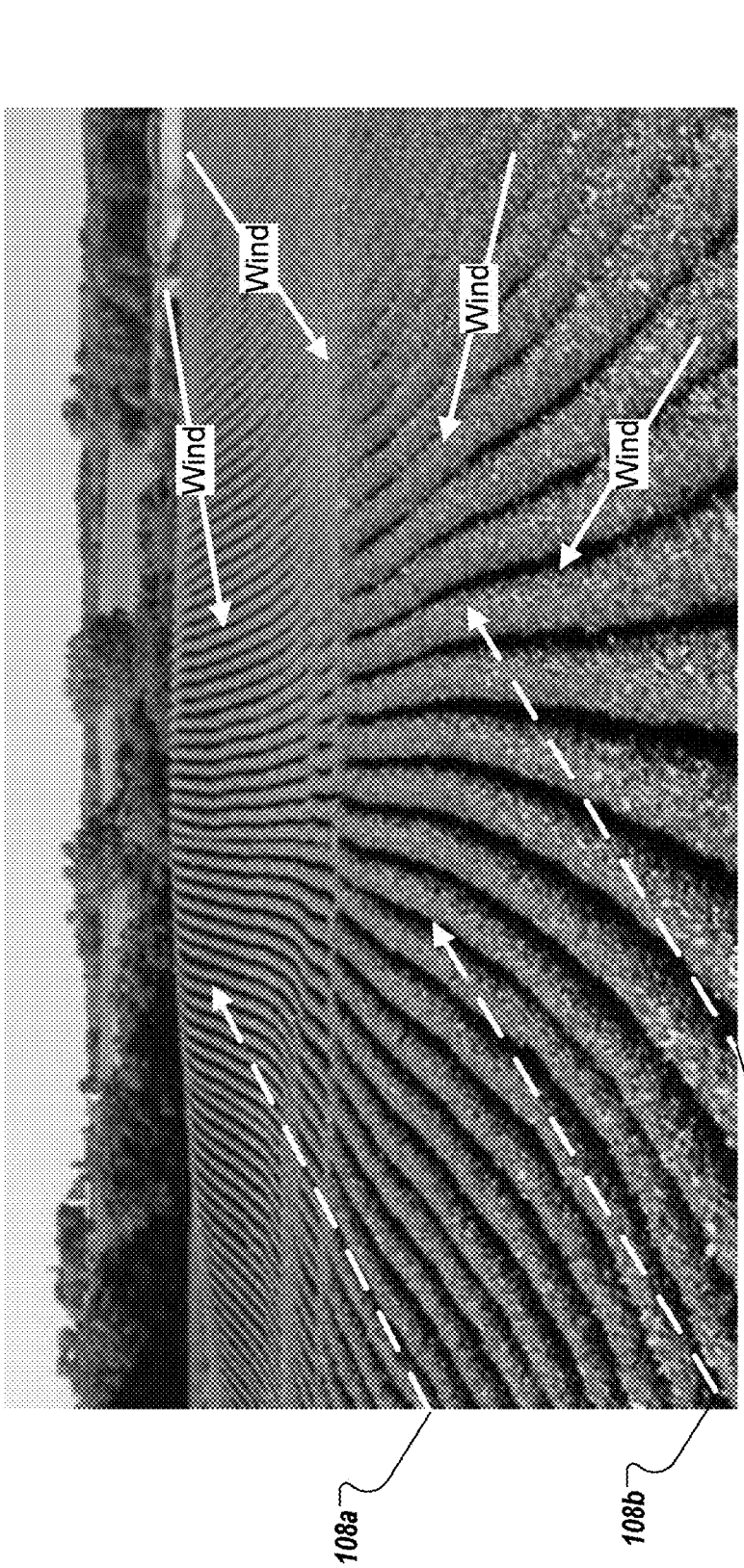

FIG. 10D

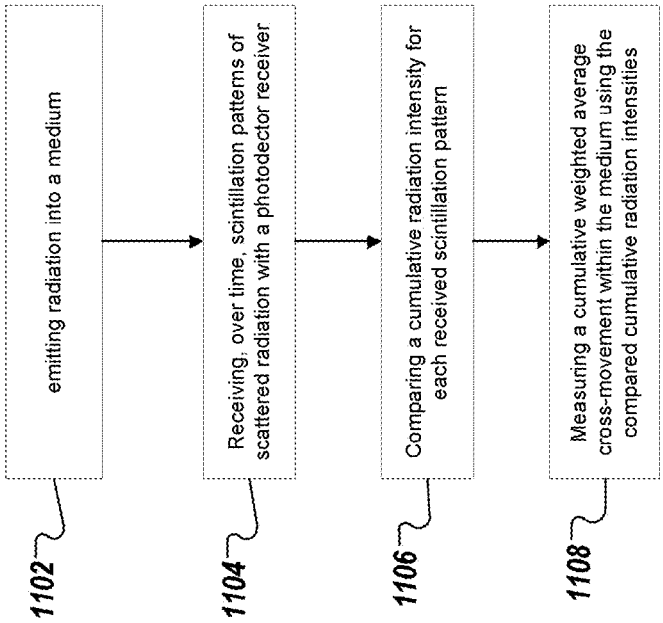
1100
emitting radiation into a medium
Receiving, over time, scintillation patterns of scattered radiation with a photodector receiver
Comparing a cumulative radiation intensity for each received scintillation pattern
Measuring a cumulative weighted average cross-movement within the medium using the compared cumulative radiation intensities
1102
1104
1106
1108

FIG. 11

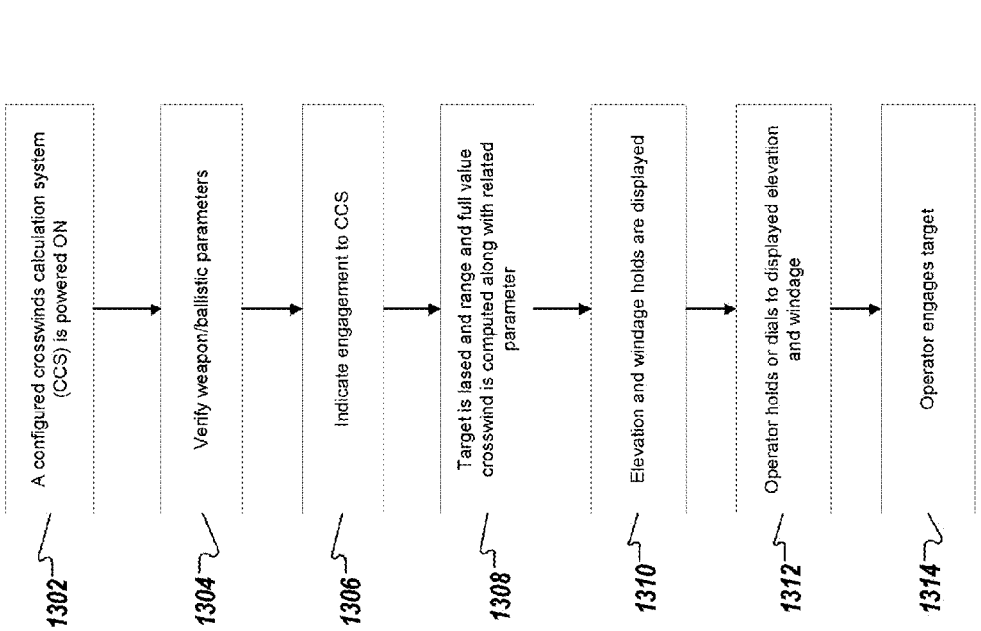
1300
A configured crosswinds calculation system (CCS) is powered ON
Verify weapon/ballistic parameters
Indicate engagement to CCS
Target is lased and range and full value crosswind is computed along with related parameter
Elevation and windage holds are displayed
Operator holds or dials to displayed elevation and windage
Operator engages target
1302
1304
1306
1308
1310
1312
1314

FIG. 13

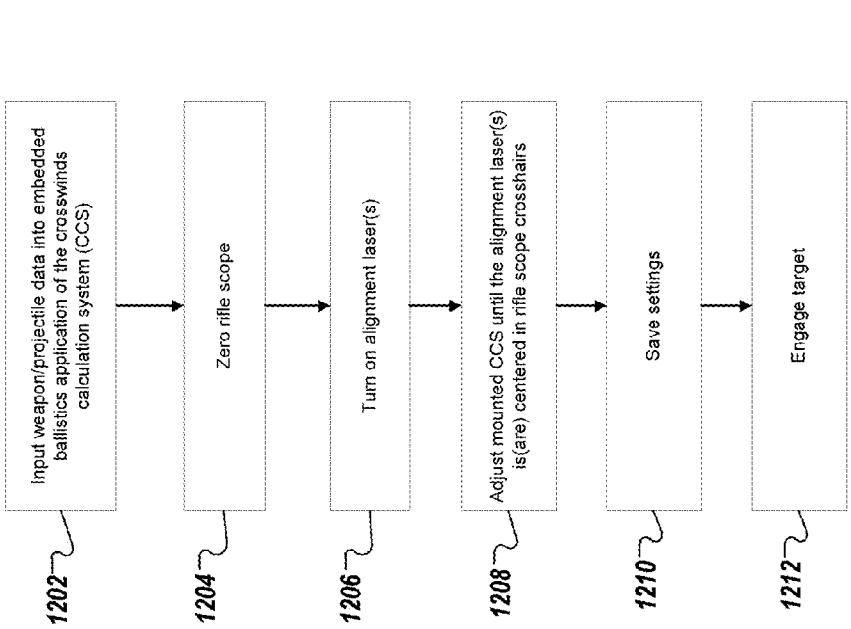
1200
Input weapon/projectile data into embedded ballistics application of the crosswinds calculation system (CCS)
Zero rifle scope
Turn on alignment laser(s)
Adjust mounted CCS until the alignment laser(s) is(are) centered in rifle scope crosshairs
Save settings
Engage target
1202
1204
1206
1208
1210
1212

FIG. 12

CROSSWIND SPEED MEASUREMENT BY OPTICAL MEASUREMENT OF SCINTILLATION

This application claims priority under 35 U.S.C. §119(e) to U.S. Provisional Patent Application Ser. No. 61/669,516, filed on Jul. 9, 2012. The entire contents of U.S. Provisional Patent Application Ser. No. 61/669,516 are hereby incorporated by reference. This application is related to co-pending U.S. patent application Ser. No. 13/870,859, filed on Apr. 25, 2013. The entire contents of co-pending U.S. patent application Ser. No. 13/870,859 are hereby incorporated by reference.

BACKGROUND

When in flight, the trajectory of a projectile fired from a weapon into the atmosphere at an intended target is affected by ballistic factors including temperature, atmospheric pressure, humidity, air friction (drag), inclination angle, Coriolis drift due to latitude, air movement (wind), and the like. A crosswind is a wind moving across the projectile's trajectory and pushing against the projectile; causing the projectile to deviate from its current trajectory, for example to a side. At longer target ranges, crosswind effects on a projectile must be taken into account. As crosswinds may vary in speed at different points along the projectile's planned trajectory, compensating for crosswind effects normally requires estimations/measurements to be made at different ranges between the weapon and the intended target and an average crosswind speed to be calculated to properly account for cumulative crosswind effects on the projectile. Crosswind speeds are often estimated by manual, visual observations made by a weapon operator and/or an assistant target spotter and then an adjustment (a target offset) is made to a weapon point-of-aim using a weapon's sights and/or physical adjustment of the weapon's direction-of-aim in order to correct for estimated crosswind effects on a fired projectile. Manual observation accuracy is affected by training, experience, and/or skills of a weapon operator/spotter. Inaccurate observations/estimations can introduce unacceptable error into offset calculations and result in a projectile missing a target.

SUMMARY

The present disclosure relates to methods and systems for measuring crosswind speed by optical measurement of laser scintillation. One method includes One method includes projecting radiation into a medium, receiving, over time, with a photodetector receiver, a plurality of scintillation patterns of scattered radiation, comparing cumulative a radiation intensity for each received scintillation pattern of the received plurality of scintillation patterns, and measuring a cumulative weighted average cross-movement within the medium using the compared cumulative radiation intensities.

Other implementations of this aspect include corresponding systems configured to perform the actions of the method. One or more systems can be configured to perform particular actions of the method. The systems can include one or more computers configured to perform the particular operations or actions by virtue of having software, firmware, hardware, computer-readable media or a combination of software, firmware, hardware, or computer-readable media installed on the systems. One or more computer programs can be configured to perform particular operations or actions by virtue of including instructions that, when executed by a computer, cause the computer to perform the actions.

The foregoing and other implementations can each optionally include one or more of the following features, alone or in combination:

A first aspect, combinable with the general implementation, wherein the medium is one of air or water.

A second aspect, combinable with any of the previous aspects, further comprising: calculating a ballistic solution for a projectile using at least the calculated cumulative weighted average cross-movement within the medium, and calculating a weapon aiming offset using the calculated ballistic solution.

A third aspect, combinable with any of the previous aspects, further comprising determining that a particular scintillation pattern is moving, determining a direction-of-movement for the particular scintillation pattern, and determining a speed-of-movement for the particular scintillation pattern.

A fourth aspect, combinable with any of the previous aspects, wherein the determination that the particular scintillation pattern is moving is performed by a cross-covariance computation between two or more scintillation patterns.

A fifth aspect, combinable with any of the previous aspects, further comprising providing a multi-axis scintillation pattern movement determination.

The subject matter described in this specification can be implemented in particular implementations so as to realize one or more of the following advantages. First, chosen weapon accuracy is enhanced by mitigating crosswind effects on fired projectiles. Second, laser scintillation allows for highly-accurate, real-time crosswind speed measurements. Third, the crosswind speed measurement can be calculated as a weighted average crosswind speed along the entire path from a weapon to target providing complete target path coverage including ranges beyond accurate manual observation and/or estimation capabilities. Fourth, accurate crosswind speed measurements can be calculated using a single pixel receiver. Fifth, accurate crosswind speed measurements and/or point-of-aim offsets can be made in different weather and atmospheric conditions. Sixth, due to provided real-time, high-accuracy offset calculations, concealment/safety of a weapon operator and/or assistant target spotter is enhanced by maximizing weapon-to-target engagement ranges and minimizing weapon operator, assistant target spotter and/or weapon movement necessary to adjust a projectile point-of aim to impact a desired target. Seventh, training of weapon operators and/or assistant target spotters is enhanced by providing real-time feedback and/or correction of manual, visual crosswind speed observations/estimations and offset calculations for various target ranges. Eighth, the crosswind calculation system (CCS) combines a ballistic calculator, receiver (s) and laser emitter(s) in a compact/portable, weapon-mountable package. Ninth, the CCS can be networked with other CCS units and/or suitable weather/atmospheric data systems to enhance accuracy of crosswind calculations, ballistic solutions, and related provided data and/or functions. Other advantages will be apparent to those skilled in the art. Tenth, one or more components of the CCS can be coupled with other instruments to provide useful combined instrumentalities.

The details of one or more implementations of the subject matter of this specification are set forth in the accompanying drawings and the description below. Other features, aspects, and advantages of the subject matter will become apparent from the description, the drawings, and the claims.

DESCRIPTION OF DRAWINGS

FIG. **1** is a block diagram illustrating a principle of operation of an example crosswind calculation system (CCS) unit in air according to an implementation.

FIG. **2** illustrates an example scintillation pattern created by atmospheric eddies diffracting/refracting scattered laser radiation according to an implementation.

FIG. **3** illustrates example scintillation pattern frame snapshots of a moving scintillation pattern for two receivers according to an implementation.

FIG. **4** illustrates an example plot of received light intensity per receiver over time according to an implementation as illustrated in FIG. **3**.

FIGS. **5**A-**5**D illustrate exemplary CCS unit receiver configurations according to various implementations.

FIG. **6** is a block diagram illustrating hardware components of an example CCS unit according to an implementation.

FIGS. **7**A-**7**B illustrate a front and rear view of an implementation of a CCS unit according to an implementation.

FIG. **7**C illustrates a CCS unit mounted to a rifle scope according to an implementation.

FIG. **8**A is an example screenshot of a ballistic solver application (BSA) user interface according to an implementation.

FIG. **8**B is an example screenshot of an advanced bullet properties data entry dialog user interface for the BSA according to an implementation.

FIG. **8**C is an example screenshot of a range card dialog user interface for the BSA according to an implementation.

FIG. **8**D is an example screenshot of a shot log dialog user interface for the BSA according to an implementation.

FIG. **8**E is an example screenshot of a simulated reticle user interface for the BSA according to an implementation.

FIGS. **8**F-**8**G are example screenshots of mobile device user interfaces for the BSA according to an implementation.

FIGS. **9**A-**9**D illustrate example CCS unit digital display screenshots according to an implementation.

FIGS. **10**A-**10**D illustrate additional applications for CCS technology.

FIG. **11** is a flow chart of an example method of measuring crosswinds according to an implementation.

FIG. **12** is a flow chart of an example pre-mission readiness method according to an implementation.

FIG. **13** is a flow chart of a mission engagement method according to an implementation.

Like reference numbers and designations in the various drawings indicate like elements.

DETAILED DESCRIPTION

This disclosure generally describes methods and systems for measuring crosswind speed by optical measurement of laser scintillation.

The following description is presented to enable any person skilled in the art to make and use the invention, and is provided in the context of a particular application and its requirements. By measuring movement of scintillation patterns along a path between an origin and destination, a cumulative crosswind speed measurement can be calculated. An example application includes providing a ballistic solution for a projectile along with a provided crosswind-corrective offset applied to enhance the likelihood that the projectile will impact an intended target. Various modifications to the disclosed implementations will be readily apparent to those skilled in the art, and the general principles defined herein may be applied to other embodiments and applications without departing from scope of the disclosure. Thus, the present disclosure is not intended to be limited only to the described and/or illustrated implementations, but is to be accorded the widest scope consistent with the principles and features disclosed herein.

Laser Radiation Scattering

Rayleigh scattering is the scattering of light or other electromagnetic radiation by particles smaller than the wavelength of light. For example, ambient light and/or a laser of sufficient power fired through a medium such as the atmosphere, gas, water, liquid, etc. causes atoms/molecules of gas/liquid to move at the same frequency of the laser radiation and become a small radiating dipole scattering the laser radiation. Similarly, Mie scattering results when roughly spherical particles approximately the size of the wavelength of the laser radiation, for example microscopic liquid droplets, particulates, dust, pollen, smoke, and the like, scatter the laser radiation when exposed to the laser.

Atmospheric Turbulence

Based at least partially on Kolmogorov's theory of 1941, it is known that temperature gradients in a gas or liquid cause the formation of small turbulent cells (or "eddies") of varying density. The eddies act as lenses and prisms to diffract/refract electromagnetic radiation passing through them causing modulations in apparent intensity of the radiation (or "scintillation"). Although the temperature gradients/intensity modulations are small for a given volume of gas/liquid, the cumulative effect of applied electromagnetic radiation, for example from a laser transmitter, passing through many moving eddies over a long distance is measureable by one or more receivers that detect and measure over time an eddy-caused scintillation pattern of Rayleigh/Mie scattered laser radiation along a path from an illumination laser transmitter to a particular target and/or scattered from the particular target. As eddies drift from gas/liquid current through a laser path, an associated scintillation pattern created by the eddies moves as well. A change in a scintillation pattern is measured and the measurement converted into a cumulative weighted average crosswind/crosscurrent speed for the entire path to the particular target for use in measuring a crosswind-corrective/crosscurrent-corrective offset.

FIG. **1** is a block diagram **100** illustrating a principle of operation of an example crosswind calculation system (CCS) **102** unit in air according to an implementation. In some implementations, the CCS **102** includes a laser transmitter **104** and two receivers **106***a*/**106***b*. An illumination laser **108** is transmitted from laser transmitter **104** and impacts target **110** resulting laser radiation from along the laser path and scattered laser radiation **112** reflecting back toward receivers **106***a*/**106***b* and through atmospheric eddies **114**. The atmospheric eddies **114** diffract/refract the laser radiation and form a scintillation pattern in air as the atmospheric eddies **114** are moved by wind **116**. Turning to FIG. **2**, FIG. **2** illustrates an example scintillation pattern **200** created by atmospheric eddies **114** diffracting/refracting scattered laser radiation **112** according to an implementation. Returning to FIG. **1**, the cumulative intensity of the moving scintillation pattern is detected using "snapshots" of a series of scintillation pattern frames recorded simultaneously by each of receivers **106***a*/**106***b*. Each frame provides data indicating an apparent intensity of the scattered laser radiation **112** varying with respect to time for each receiver **106***a*/**106***b* (see FIG. **3** below).

The laser transmitter **104** is coupled with appropriate optics for illumination laser **108** focusing and transmission. The illumination laser **108** is used to illuminate a target. In some implementations, a target can include a gas/liquid, for example air/water, at a desired distance. In some implementations, the laser can operate in a continuous or pulsed mode. A continuously operating laser transmitter **104** can provide

real-time, continuous crosswind speed calculations while a pulsed laser transmitter **104** can provide intermittent, as-needed crosswind speed calculations. In addition, if a laser is pulsed and receivers are gated, a given segment of distance between the laser source and the atmosphere at the distance can be measured. For example, crosswind speed can be measured in a segment of 100-120 m from the laser source. Next, a segment 120-140 m can be measured. In this manner, the average crosswind to each segment can be determined and the particular segment crosswinds also determined.

In some implementations, the laser transmitter emission axis **104** is bore sighted parallel to the detection axis of the receivers **106***a*/**106***b*. In other implementations, the laser transmitter **104** emission axis is placed at an angle to the detection axis of the receivers **106***a*/**106***b*. In some implementations, the CCS **102** does not include a laser transmitter **104** and instead depends upon sufficient ambient or other light sources to provide necessary illumination to detect atmospheric eddies between the CCS **102** and a target. For example, for daytime use, sunlight can provide sufficient illumination for scintillation pattern detection. In some implementations, other sufficient light sources may include high-intensity flood lights, security lights, flashlights, headlights, scattered illumination, targeting, and/or other laser light, and the like.

Typically each receiver **106***a*/**106***b* is made up of one photodiode coupled with appropriate optics for focusing a separate received scintillation pattern image on the photodiode. The cumulative intensity of the light of the received scintillation pattern is converted by the photodiode into either current or voltage, depending on a photodiode mode of operation, which can then be analyzed in order to determine the individual scintillation pattern light intensity. In this manner, each photodiode can be considered as a single-pixel receiver in that it receives a scintillation pattern and converts the received scintillation pattern into a single data point measuring cumulative light intensity of the scintillation pattern. Known spacing between and a size of receivers **106***a*/**106***b* are factored into detection/calculation software allowing each receiver to detect a particular scintillation pattern intensity and for the CCS **102** to compare multiple intensity determinations over time in order to further determine whether the scintillation pattern is moving, a direction of movement, a speed of movement, and a cumulative weighted average crosswind speed for the entire path to the particular target. The minimum number of receivers is one, but two or more receivers or one or more receivers with multiple photodiodes may be used to enhance crosswind calculation accuracy as well as provide multi-axis scintillation pattern movement determinations. Other receiver implementations can include multiple photodiodes and/or single photodiodes. In some instances, optics can be used to focus light on particular detector areas of a photodiode. In these instances, the use of the optics can allow the simulation of multiple individual/grouped photodiodes. For example, a quadrant detector (or simulated quadrant detector) can be used in some implementations.

FIG. **3** illustrates example scintillation pattern frame snapshots **300** of a moving scintillation pattern for two receivers according to an implementation. As illustrated, each receiver **106***a*/**106***b* receives a separate image of a scintillation pattern in each of frames **304***a*, **304***b*, and **304***c* and each scintillation pattern image is converted into light intensity data. The scintillation pattern is illustrated as moving from right-to-left (as viewed from the front of the CCS **102**) from receiver **106***a* to receiver **106***b*.

FIG. **4** illustrates an example plot **400** of received light intensity per receiver over time according to an implementation as illustrated in FIG. **3**. The plotted intensity shows that the peak intensity of the moving scintillation pattern of FIG. **3** first passes through receiver **106***a* and then receiver **106***b*. Using the plotted determined intensity data, the CCS **102** can determine that the scintillation pattern is moving from right to left. Additionally, given the spacing between receivers and size of the receivers, the CCS **102** can determine speed of movement and calculate a crosswind speed average. In some implementations, a simple calculation can be performed where a time delay between the signal of receiver **106***a* and **106***b* can be divided by a time it took the moving scintillation pattern to move a known distance between the receivers. Given an example closest distance between the receivers **106***a*/**106***b* of 18 mm, the scintillation pattern is illustrated to have taken approximately 8 ms to move the 18 mm. The calculated example average crosswind speed would be 2.25 m/s or 5.0 mph. In other implementations, a cross-covariance (i.e., the similarity between two signals) of the two received scintillation pattern intensities is computed providing a more robust and accurate weighted average crosswind speed along the entire path from the CCS **102** to an intended target. In the case of a quadrant detector, a Greenwood frequency is calculated from measured light intensity data and the crosswind speed then derived.

FIGS. **5**A-**5**D illustrate exemplary CCS **102** receiver configurations according to various implementations **500***a*-**500***d*. FIG. **5**A illustrates an implementation of a CCS **102** with a single receiver **502***a*. In one implementation, the receiver **502***a* is used in conjunction with a laser transmitter **104** emission axis where the angle between the laser transmitter **104** and the detection axis of the receiver **502***a* is varied by moving either the laser transmitter **104** or the receiver **502***a*. In one implementation, the laser transmitter **104** is movable. In this implementation, as an emitted illumination laser **108** crosses the receiver **502***a*'s field-of-view, a scintillation pattern is created and received by the receiver **502***a*. The known angle of the illumination laser **108** to the receiver **502***a* is used as a data point in determining the distance from the receiver **502***a* and for subsequent calculations of the crosswind at that distance. Other variations include two receivers **502***a*/**502***b* with a wider illumination laser **108** beam that covers both receiver fields-of-view simultaneously or the illumination laser **108** being configured to cross each receiver's field-of-view at a slightly different distance due to the laser transmitter **104** emission axis.

In another implementation, a receiver **502***a* detection axis can be moved to vary its angle with respect to a fixed emission axis of the laser transmitter **104**. For example, assume an (X, Y) coordinate system where the X-axis is an illumination laser **108** placed at (−100, 0) and is firing toward higher values of X and a receiver **106** is placed at (0, −100) and faces toward higher Y values. If the receiver **106** is rocked from points (−10, 0), (0, 0), and (10, 0), scintillation patterns can be detected at each point along the path of the illumination laser **108**. In these implementations, the laser transmitter **104** and/or receiver **502***a* can be moved using, for example, electric motors, mechanical methods, hydraulics, and/or other suitable methods.

FIG. **5**B illustrates an implementation of a CCS **102** with two receivers **502***b*/**504***b*. Typically this implementation is coupled with a laser transmitter **104** emission axis either boresighted parallel to the detection axes of receivers **502***b*/**504***b* or a laser transmitter **104** emission axis at an angle to the detection axes of receivers **502***b*/**504***b*. This implementation

provides the capability to detect crosswind directional movement in one axis, for example left-to-right.

FIG. **5**C illustrates an implementation of a CCS **102** with three receivers **502***c*/**504***c*/**506***c* arranged in a multi-axis configuration. For example, receivers **502***c*/**504***c* can be considered to be on an X-axis while receivers **504***c*/**506***c* can be considered to be on a Y-axis. Typically this implementation is coupled with a laser transmitter **104** emission axis either boresighted parallel to the detection axes of receivers **502***c*/**504***c*/**506***c* or a laser transmitter **104** emission axis at an angle to the detection axes of receivers **502***b*/**504***b* detection axes. This implementation provides the capability to detect multi-axis crosswind directional movement, for example left-to-right as well as up-and-down. Additional receivers or receiver configurations could be used to provide additional directional detection or to enhance the accuracy of the measurements.

FIG. **5**D illustrates an implementation of a CCS **102** with one four quadrant receiver **502***d*. The illustrated quadrant receiver **502***d* is divided into four separate photodetectors A-D, for example photodiodes, arranged in a multi-axis configuration and separated by a small distance where each photodetector detects an intensity of light falling on the particular photodiode. For example, each pair of photodetectors A-B and D-C can provide one axis of crosswind directional movement detection similar to the implementation described with respect to FIG. **5**B. Likewise, photodetector pairs A-D and B-C can provide a perpendicular axis of crosswind directional movement detection. Combined, a single quadrant detector can provide the same dual-axis functionality as the implementation described with respect to FIG. **5**C. In another implementation, the four quadrants can be used as two halves or in any other suitable configuration of the quadrants, including vertical, horizontal, and an 'X' pattern.

In other implementations, each photodetector can also be subdivided using optics to allow/restrict illumination of a portion of the photodetector. For example, optics with diaphragms can be used to allow/restrict illumination of the portions of the photodetector. In this manner, each single photodetector can be used to simulate multiple photodetector, for example a quadrant detector. In this implementation, for example, quadrant receiver **502***d* in FIG. **5**D could be a single photodiode. Optics could then be used to create the A, B, C, and D quadrant configuration or any other number of distinguishable illuminated portions of the photodetector, including 2, 3, or 4 portions.

FIG. **6** is a block diagram **600** illustrating hardware components of a CCS **102** according to an implementation. Each receiver **106***a*/**106***b* includes a collection optic, line filter, and photodetector, for example a photodiode. Each collection optic reimages a scintillation pattern from a collection plane at the front of each receiver **106***a*/**106***b* through a line filter and onto the photodetector. In some implementations, each receiver **106***a*/**106***b* is focused at infinity to ensure that returned scattered laser radiation is collimated and to obtain a maximum amount of light on the photodetector. Collection optics can include, among others, optical filters and polarization/diffraction techniques to isolate specific atmospheric effects.

The illumination laser assembly **602** includes a collimator and a laser transmitter **104**. The laser transmitter **104** can be, among other things, a light emitting diode (LED), a superluminescent diode (SLD), a solid, chemical, and/or gas laser, and/or multiple lasers or arrays of laser emitters covering different laser powers, frequencies, and/or optical properties. For example, an emitted illumination laser **108** can be visible, invisible, and/or multi-frequency. The collimator narrows and aligns the output of the laser transmitter **104** to produce a narrow, focused illumination laser **108** with which to illuminate a target to produce scattered laser radiation **112** as shown in FIG. **1**.

The alignment laser assemblies **604***a*/**604***b* each also include a collimator and a laser transmitter to emit alignment lasers used to assist with aligning a CCS **102** with the riflescope crosshairs of a weapon the CCS **102** is mounted upon. The collimator associated with the alignment laser assemblies **604***a*/**604***b* operates similarly to that in the illumination laser assembly **602**. Each alignment laser assembly **604***a*/**604***b* laser transmitter can also be a light emitting diode (LED), a super luminescent diode (SLD), a solid, chemical, and/or gas laser, and/or multiple lasers or arrays of laser emitters covering different laser powers, frequencies, and/or optical properties. For example, an emitted alignment laser can be visible, invisible, and/or multi-frequency. In some implementations, the pair of alignment laser assemblies **604***a*/**604***b* can be made up of a visible and an invisible alignment laser. The visible alignment laser assembly **604***a* can be used, for example, during daytime and/or in a safe environment where visibility of an alignment laser is either necessary and/or not of concern to a CCS **102** operator. Likewise, the invisible alignment laser assembly **604***b* can be used during nighttime, where concealment of a CCS **102** operator is a priority, and/or in other environments where visibility of an alignment laser is not necessary and/or of concern to a CCS **102** operator. In some implementations, both alignment lasers can be used simultaneously. In some implementations, both alignment lasers can be either visible or invisible. In other implementations, there can be zero, one, or three or more available alignment laser assemblies.

The integrating circuits **606***a*/**606***b* each sample an associated photodetector and transfer the data to system memory (not illustrated) where the data is accessed by internally stored applications (not illustrated) providing crosswind speed (wind calculator application (WCA)) and ballistic solution calculations (ballistic solver application (BSA)) executed by a main system processor **610**. The WCA performs crosswind speed calculations based on the sampled photodetector data and weather/atmospheric data provided by integrated or connected weather/atmospheric sensors. The BSA provides projectile ballistic calculation and other related functionality (refer to FIGS. **8**A-**8**G and associated descriptions below for additional information concerning BSA functionality) based upon ballistics data and the weather/atmospheric data provided by the integrated or connected weather/atmospheric sensors. The BSA computes wind influence on a projectile achieving six degrees-of-freedom using a three degree-of-freedom modified point mass numerical solver that considers velocity, time of flight, and bullet drop as a function of the projectile's position downrange until the projectile reaches the target taking into account current environmental conditions. The BSA fully accounts for Coriolis effects in both vertical and horizontal directions-of-fire, spin drift, and aerodynamic jump (the Magnus effect). The BSA contains all standard drag curves (G1, G7, etc.) and the ability to input/create custom drag curves for custom/designer projectiles.

Generally, the processor **610** executes instructions and manipulates data to perform the operations of the CCS **102**. Specifically, the processor **610** executes instructions required to provide calculations and associated functionality for measuring crosswind speed by optical measurement of laser scintillation and providing ballistic solution calculations. Although illustrated as a single processor **610**, two or more processors **610** may be used according to particular needs, desires, or particular implementations of the CCS **102**.

The processor **610** is coupled with one or more external device interfaces **612***a*/**612***b* used for connecting external devices to the CCS **102**. The external device interfaces **612***a*/**612***b* can support, for example, universal serial bus (USB), FIREWIRE, LIGHTNING, RS-232, BLUETOOTH, WiFi, wireless, cellular and/or other suitable interface type connectivity to the CCS **102**. External devices could include a flash memory to store data, a computer to update internal software/application programs (not illustrated), a KESTREL brand pocket weather station (PWS) providing, among other things, temperature, pressure, and humidity data, a rifle scope, a spotting scope, a display, a recording device such as a computer or server to capture the data from the CCS **102**, an array of wind turbines, and the like.

The sensor and user interface processor **614** is coupled with the processor **610** and provides functionality to integrate support for various built-in sensors (e.g., an inclination sensor, digital magnetic compass, temperature sensor, pressure sensor, humidity sensor, and the like) is available, a digital display **616**, and a user input keypad **618**. The digital display **616** provides, for example, textual and/or graphical data to a CCS **102** user regarding crosswind speed, ballistic solutions, target data, atmospheric data, and other suitable data. In some implementations, the digital display **616** can be configured to be removable in a communicably coupled manner with the CCS **102** unit, for example using a wired or wireless connection. In other implementations, a separate communicably coupled digital display **616** can be used in conjunction with a digital display **616** integrated into the CCS **102** unit. In this implementation, each digital display **616** can display different data to a CCS **102** user.

The user input keypad **618** allows a CCS **102** user to manually input data and or select menu options and/or functions/settings directly on the CCS **102** unit. In some implementations, the user input keypad **618** can be configured to be removable in a communicably coupled manner with the CCS **102** unit, for example using a wired or wireless connection. In other implementations, a separate communicably coupled user input keypad **618** can be used in conjunction with a user input keypad **618** integrated into the CCS **102** unit. In this implementation, each user input keypad **618** can be used to input different data to a CCS **102** unit.

The accessory rail mount **620** actuator provides functionality to attach the CCS **102** to an accessory mounting rail or base on, for example, a firearm or a scope. For example, the accessory rail mount **620** actuator can allow the CCS **102** to be mounted to a PICATINNY rail, WEAVER rail, tripod adapter, and other suitable accessory rail or base types. In other implementations, the accessory rail mount actuator **620** allows the CCS **102** to be mounted to accessory rails on vehicles, tripods, walls, towers, and other stationary and/or mobile structures.

FIGS. **7**A-**7**B illustrate a front and rear view of an implementation of a CCS unit according to an implementation. FIG. **7**A illustrates a front view of the CCS **102** with receivers **106***a*/**106***b*, illumination laser assembly **602**, alignment laser assemblies **604***a*/**604***b*, and accessory rail mount **620**. Those of skill in the art will recognize that the provided implementation of a CCS **102** is only one of many possible implementations consistent with this disclosure. The provided implementation is not meant to limit the disclosure in any way.

FIG. **7**B illustrates a rear view of the CCS **102** with digital display **616**, user input keypad **618**, and accessory rail mount **620**. Those of skill in the art will recognize that the provided implementation of a CCS **102** is only one of many possible implementations consistent with this disclosure. The provided implementation is not meant to limit the disclosure in any way. In some implementations, the CCS **102** could be communicatively coupled with a rifle scope/sight and project all or a portion of the digital display **616** data into the rifle scope/sight for a weapon operator and/or assistant spotter. For example, range-to-target, target inclination, wind velocity, windage, and elevation are all information that could be provided to a scope user directly through scope itself. This projection would allow a weapon operator/spotter to remain on target without breaking visual contact to make adjustments or read the CCS **102** digital display **616**.

FIG. **7**C illustrates a CCS **102** unit mounted to a rifle scope according to an implementation **700***c*. In the illustration, the CCS **102** is mounted on the forward part of the rifle scope via an accessory rail. In other implementations, the CCS **102** can be mounted along the rifle scope in any suitable position.

FIGS. **8**A-**8**G illustrate example screenshots of BSA user interfaces available when viewed on a computer display communicatively coupled to a CCS **102**, for example using one or more of the external device interfaces **612***a*/**612***b*. In some implementations, an external computer can also serve as a base station platform to input data, program, update, and/or troubleshoot the CCS **102**. The external computer can also act as a graphical user interface for the WSA/BSA or other software executing within the CCS **102**.

FIG. **8**A is an example screenshot **800***a* of a ballistic solver application (BSA) user interface according to an implementation. The BSA is the ballistic solver/calculation software engine used by the WCA to determine a ballistic solution for entered weapon/projectile **802***a* (e.g., sight height, barrel twist rate, zero range, custom bullet properties, and muzzle velocity), atmosphere **804***a* (e.g., wind at muzzle, wind at mid-range, wind at target, temperature, pressure, and humidity), and target **514** (e.g., range to target, target speed, inclination, heading, and latitude) information to produce the ballistic solution. For example, a user can enter custom projectile properties using a bullet property editor (described below) to compare how a determined offset calculation **808***a* for a specific weapon/projectile **802***a*, atmosphere **804***a*, and/or target **806***a* data is affected by data changes. In the example screenshot, the user is presented with an aiming elevation offset of 13.47 and windage setting of 0.51 to the left.

FIG. **8**B is an example screenshot **800***b* of an advanced bullet properties data entry dialog external user interface for the BSA **112** according to an implementation. A user can enter advanced bullet properties using the presented data entry fields that are factored into a ballistic solution provided by the BSA. For example, the user can select the "Bullet Property Editor" GUI button on the WCA and/or BSA application user interface to enter bullet properties **802***b* (e.g., bullet diameter, bullet length, bullet mass, ballistic coefficient, and drag curve type) and ballistic coefficient table **804***b* table values (e.g., Mach and ballistic coefficient (BC) values).

FIG. **8**C is an example screenshot **800***c* of a range card dialog user interface for the BSA **112** according to an implementation. In some implementations, a user can select to generate a range card from the WCA and/or BSA user interface menus. The generated range card **800***c* presents various types of selectable data plot options **802***c* (e.g., time of flight, elevation, energy, velocity, and windage) to generate graphical data plots **804***c*. In some implementations, the generated graphical data plots **804***c* can be overlaid for comparison purposes.) A user may enter specific range information **806***c* (e.g., start range, stop range, and increments) in order to generate range card data **808***c* for the user's reference. The range card **800***c* can be used for in-depth guidance of a weap-

on's effective range of operation for given operating conditions taking into account wind measurement and environmental data.

FIG. **8**D is an example screenshot **800***d* of a shot log dialog user interface for the BSA **112** according to an implementation. In some implementations, a user can select to generate a shot log **802***d* from the WCA and/or BSA user interface menus. The generated shot log **802***d* records a captured data set of data and time, windage hold, readings from all reporting ASP 150 units, temperature, pressure, humidity, and the like for later analysis. The user can use the shot log to compare hit/miss results with the recorded data.

FIG. **8**E is an example screenshot **800***e* of a simulated reticle user interface for the BSA **112** according to an implementation. In some implementations, a user can select to generate a simulated reticle **802***e* visually indicating how the user would use a real weapon sight reticle to match a presented offset calculation by either the WCA and/or BSA. The BSA can simulate various types of reticles, including fine crosshair, duplex crosshair, mil-dot, modern range finding, and any other suitable reticle type. The reticle simulations can be used for training purposes and to train users the proper use of various reticles for the same presented offset calculations. In some implementations, the CCS **102** could be communicatively coupled with a sighting device, for example a rifle scope/sight, and can initiate projection of and/or project the simulated reticle into the sighting device such that it is viewable by an operator of the sighting device. In the case of a weapon operator and/or assistant spotter, a projection would allow a weapon operator/spotter to remain on target without breaking visual contact with the target to make adjustments or read the CCS **102** digital display **616**. The weapon operator/spotter could also easily change reticles to one most advantageous to a current target engagement situation, wind, and/or atmospheric conditions. In some implementations, the CCS **102** can make recommendations to a weapon operator/spotter as to which reticle to use. In some implementations, the projection can display a proper point-of-aim/projected impact point for operator reference. For example, the simulated reticle can project where a projectile is projected to impact without applied offsets, a projected impact point with corrected offsets, and/or a real-time visual indication of a hold offset that can change as the weapon is moved due to digital compass, inclinometer, and other sensor data. An example of a projected impact point is indicated impact point **804***e*. As will be apparent to those of skill in the art, other suitable data points can be provided to a weapon operator.

In other implementations, a rifle scope/sight can be integrated into a CCS **102** system to provide fully integrated functionality. In other implementations, one or more of WSA **110** and/or BSA **112** can be integrated into a rifle scope/sight without the laser illumination, detection, and laser alignment features of the described CCS **102**. Other variations of CCS **102** feature integration with a rifle scope/sight consistent with this disclosure are also envisioned.

FIGS. **8**F-**8**G are example screenshots **800***f*/**800***g* of mobile device user interfaces for the BSA **112** according to an implementation. FIG. **8**F illustrates an example screenshot **800***f* of target data entry fields **802***f* (e.g., name, range, inclination, and heading). As illustrated, the interface will also allow the entry of data related to environment, weapon, and bullet consistent with the data fields described above with respect to at least FIGS. **5** and **8**A-**8**B. An offset calculation **804***f* for the entered data is also presented. In the example screenshot **800***f*, the user is presented with an aiming offset elevation of 13.39 and windage setting of 0.5 to the right.

FIG. **8**G illustrates an example screenshot **800***g* of a simulated reticle user interface. As illustrated, the interface provides a reticle **802***g*, target distance **804***g*, wind direction and speed **806***g*, a quick determination target speed and direction indication **808***g* (e.g, here the target is indicated as moving to the right slowly), and offset calculation data **810***g*. In the example screenshot **800***g*, the user is presented with an aiming offset elevation of 29.5 and windage setting of 11.4 to the right.

Those of skill in the art will appreciate that each provided example GUI screenshot is only one of a multitude of possible GUI implementations depending on, for example, the use of various operating systems, computer hardware, display technologies, software standards, software protocols, and the like. The provided examples are meant to only illustrate possible GUI interfaces consistent with this disclosure and are not meant to be limiting in any way.

FIGS. **9**A-**9**D illustrate example CCS **102** unit digital display **616** screenshots **900***a*-**900***d* according to an implementation. FIG. **9**A illustrates the display of a ballistic offset calculation provided by the CCS **102** along with a target range and wind speed. In the example screenshot **900***a*, the user is presented with an aiming offset elevation of 16.6 and windage setting of 2.3 to the left for a target at **1089** with a wind speed of 5.0 to the right.

FIG. **9**B illustrates the display of a target range and heading. In the example screenshot **900***b*, the target is indicated as **1089***m* at a heading of 204 degrees.

FIG. **9**C illustrates the display of target heading, CCS **102** inclination, and target latitude/longitude information. In the example screenshot **900***c*, the target heading is 203 degrees, inclination is 1 degree, latitude is 41.028388, and longitude is −81.625396.

FIG. **9**D illustrates the display of atmospheric temperature, pressure, and humidity. In the example screenshot **900***d*, the temperature is 76.8 F, pressure is 28.89 in Hg, an Humidity is 42.0%.

Each of these displays could be viewed through a scope as part of the image visible to an operator or shown on a separate display. Those of skill in the art will appreciate that each provided example digital display screenshot is only one of a multitude of possible implementations of data and how it can be displayed to a user. The provided examples are meant to only illustrate data digitally displayed in a manner consistent with this disclosure and are not meant to be limiting in any way.

FIGS. **10**A-**10**C illustrate additional applications **1000***a*-**1000***c* for CCS technology.

FIG. **10**A illustrates the application **1000***a* of CCS **102** technology to provide crosswind speed calculations to increase the efficiency of wind turbines. In typical operation, wind turbine rotor blades **1002***a* adjust themselves in a proactive manner depending upon crosswind conditions detected at or approaching a wind turbine rotor assembly. In an implementation, a CCS **102** system can be mounted on the wind turbine rotor assembly with the illumination laser **108** transmitting into the air to the front of the wind turbine. It should be noted that the illumination laser **108** does not need to be aimed at a specific reflecting target, and may just be transmitted into the air. As the crosswind is analyzed ahead of the wind turbine rotor assembly, the wind turbine rotor blades **1002***a* can proactively adjust themselves **1004***a* for the arriving wind conditions, increasing overall wind turbine efficiency. In other implementations, illumination laser(s) **108** can be transmitted to any side of the wind turbine to provide analysis of crosswinds to the side. In other implementations, multiple CCS **102** systems can be coupled to the control system for one

or more wind turbines to provide information regarding the wind approaching, for example, a wind farm thereby allowing the control system to proactively adjust one or more wind turbines. Such coupling could be wired or wireless.

FIG. **10**B illustrates the application **1000***b* of CCS **102** technology to provide crosscurrent speed calculations to increase the efficiency of water turbines **1002***b* and water-going vessels **1004***b*. In typical operation, water turbine **1002***b* rotor blades and water-going vessels **1004***b* adjust themselves in a reactive manner depending upon crosscurrent conditions detected at the water turbine **1002***b* rotor assembly and water-going vessel **1004***b*. In an implementation, a CCS **102** system can be mounted on the water turbine **1002***b*/water-going vessel **1004***b* with the illumination laser **108***a*/**108***b* transmitted into the water. It should be noted that the illumination lasers **108** do not need to be aimed at a specific reflecting target, and may just be transmitted into the water. As the range current/crosscurrent is analyzed ahead of the water turbine **1002***b*/water-going vessel **1004***b*, the water turbine **1002***b* rotor blades/water-going vessel **1004***b* can proactively adjust themselves for the arriving current conditions, increasing overall turbine/vessel efficiency. In other implementations, illumination laser(s) **108** can be transmitted to any side of a water turbine **1002** rotor assembly or water-going vessel **1004***b* to provide analysis of crosscurrents to the side.

FIG. **10**C illustrates the application **1000***c* of CCS **102** technology to provide crosswind speed calculations to increase the efficiency of landing operations on an aircraft carrier. In typical operation, aircraft launch into the wind and land with the wind. The aircraft carrier operations center **1002** can introduce turbulence as it breaks up wind flow. In addition, normal air currents introduce range wind and crosswind across the aircraft carrier deck causing pilots to continuously and reactively adjust aircraft **1004***b* pitch, roll, and yaw while landing. In an implementation, a CCS **102** system can be mounted on the aircraft carrier, in possibly an overlapping pattern, and/or aircraft with the illumination lasers **108** analyzing crosswinds. It should be noted that the illumination lasers **108** do not need to be aimed at a specific reflecting target and may just be transmitted into the air. In some implementations, the system can be used to proactively assist the pilot in landing with automated landing functions, landing assistance functions, and/or graphical displays/warnings regarding wind conditions. In other implementations, the same principles could be applied for airports and other aircraft landing zones. In another example, the principles could be used to determine crosswind speeds/patterns prior to and during fireworks displays to determine if wind/atmospheric conditions are safe for the use of fireworks.

FIG. **10**D illustrates the application **1000***d* of CCS **102** technology to provide crosswind speed calculations of a field of crops. Winds over the field of crops affect, for example, pollen transfer, pesticide/fertilizer distribution, pest dispersion, irrigation water dispersion, humidity conditions, and the like. A CCS **102** system(s) can be placed in the field of crops and used to determine crosswinds. Knowing the crosswinds over the field of crops can permit more accurate fertilizer and pesticide dispersion, more efficient irrigation, predictive pollination studies, and the like. It should be noted that the illumination lasers **108***a*-**108***c* do not need to be aimed at a specific reflecting target and may just be transmitted into the air. In other implementations, the same principles could be applied to wind turbine farms (e.g., to provide similar and/or complementary data to that discussed in FIG. **10**A) for golf courses, large lawns, and predictive dispersal of pollution, toxic chemicals, bio-agents, and/or radiation plumes from nuclear accidents. In another example, the CCS technology could be used to determine winds ahead of a water-going vessel to better adjust sails and/or be prepared for wind changes or to gauge flow in industrial pipes/pipelines to provide flow control.

In other implementations, a CCS **102** system can be coupled with a laser range finder (LRF) to provide laser ranging of a target and crosswind speed analysis simultaneously. Coupling can be accomplished by wired, wireless, and/or other suitable connections between the LRF and the CCS **102** system. A LRF can be coupled with any of the CCS implementations described herein. For example, for shooting sports, a shooter could use the combined instrument to simultaneously determine a range to a target and crosswind. Likewise, the described combined instrument could be used in sports such as golf to assist a player with determining a range to a hole and factoring in winds for a golf hit.

In other implementations, the CCS **102** system can include and provide integrated LRF functionality. For example, the illumination laser **108** or an alignment laser can be used in conjunction with included LRF application software and/or hardware (not illustrated) to provide the integrated LRF functionality. In some implementations, two or more of the illumination laser **108** and/or alignment lasers can be used to provide, for example, increased LRF accuracy and range. Integrated LRF functionality can be coupled with any of the CCS implementations described herein.

In another implementation, the CCS **102** system can provide data to an automated weapon system. The weapon system can include computers, servers, platforms, electric motors/servo-mechanisms and associated components to provide multi-axis movement, and/or the like. For example, the CCS-system-provided ballistic and/or crosswind speed measurement data can be used by the automated weapon system to automatically aim a weapon at a target and/or track a target with a weapon. In some implementations, the weapon can also be automatically fired by the automated weapon system responsive to data provided by the CCS **102** system. Another implementation could include the CCS-system-provided ballistic and/or crosswind speed measurement data used to physically adjust the zero of a weapon sighting device to account for the effects of the data on a projectile, thus saving a weapon operator from making sighting device adjustments and/or holding based on provided offset/windage values.

FIG. **11** is a flow chart of an example method of measuring crosswinds according to an implementation. For clarity of presentation, the description that follows generally describes method **1100** in the context of FIGS. **1**-**4**, **5**A-**5**D, **6**, **7**A-**7**C, **8**A-**8**G, **9**A-**9**D, and **10**A-**10**C. However, it will be understood that method **1100** may be performed, for example, by any other suitable system, environment, software, and hardware, or a combination of systems, environments, software, and hardware as appropriate. In some implementations, various steps of method **1100** can be run in parallel, in combination, in loops, or in any order.

At **1102**, radiation is emitted into a medium. In some implementations, the radiation can be from a laser. In other implementations, the radiation can be from ambient light, such as sunlight. In some implementations, the medium can be a gas or a liquid, for example air or water. The radiation need to be emitted toward a particular target. In some implementations, a target can be considered to be the medium itself. From **1102**, method **1100** proceeds to **1104**.

At **1104**, receiving, over time, a plurality of scintillation patterns of scattered radiation from the emitted radiation. The

scintillation patterns are received with a photodetector receiver, for example a photodiode. From **1104**, method **1100** proceeds to **1106**.

At **1106**, cumulative radiation intensity for each received scintillation pattern is compared. In some implementations, changing cumulative radiation intensity can be used to determine that a scintillation pattern is moving. From **1106**, method **1100** proceeds to **1108**. At **1108**, a cumulative weighted average cross-movement within the medium is measured using the compared cumulative radiation intensities. From **1108**, method **1100** stops.

FIG. **12** is a flow chart of an example pre-mission readiness method **1200** according to an implementation. For clarity of presentation, the description that follows generally describes method **1200** in the context of FIGS. **1-4**, **5**A-**5**D, **6**, **7**A-**7**C, **8**A-**8**G, **9**A-**9**D, **10**A-**10**C, and **11**. However, it will be understood that method **1200** may be performed, for example, by any other suitable system, environment, software, and hardware, or a combination of systems, environments, software, and hardware as appropriate. In some implementations, various steps of method **1200** can be run in parallel, in combination, in loops, or in any order.

At **1202**, a weapon operator/assistant spotter enters weapon/projectile data into an embedded ballistics application of the crosswinds calculation system (CCS). Weapon data can include sight height, zero range, rifle barrel twist rate, and other suitable data. Projectile data can include bullet diameter, bulled weight, ballistic coefficient, muzzle velocity, and other suitable data. From **1102**, method **1200** proceeds to **1204**.

At **1204**, the rifle scope on the weapon is zeroed. If the CCS is mounted on a spotting scope, this step is not necessary. From **1204**, method **1200** proceeds to **1206**.

At **1206**, an alignment lasers is turned on to align the CCS with the riflescope crosshairs. From **1206**, method **1200** proceeds to **1208**.

At **1208**, the mounted CCS is adjusted until the alignment laser is properly centered in the rifle scope crosshairs. From **1208**, method **1200** proceeds to **1210**.

At **1210**, CCS settings are saved. From **1210**, method **1200** proceeds to **1212**.

At **1212**, the weapon operator/assistant engages the target. From **1212**, method **1200** stops.

FIG. **13** is a flow chart of a mission engagement method **1300** according to an implementation. For clarity of presentation, the description that follows generally describes method **1300** in the context of FIGS. **1-4**, **5**A-**5**D, **6**, **7**A-**7**C, **8**A-**8**G, **9**A-**9**D, **10**A-**10**C, **11**, and **12**. However, it will be understood that method **1300** may be performed, for example, by any other suitable system, environment, software, and hardware, or a combination of systems, environments, software, and hardware as appropriate. In some implementations, various steps of method **1300** can be run in parallel, in combination, in loops, or in any order.

At **1302**, a configured crosswinds calculation system (CCS) is powered ON. From **1302**, method **1300** proceeds to **1304**.

At **1304**, weapon/ballistic parameters are optionally verified. From **1304**, method **1300** proceeds to **1306**.

At **1306**, a weapon operator/assistant spotter indicates engagement to the CCS. In some implementations, the indication can include depressing a pressure switch on the weapon or a button on the CCS. From **1306**, method **1300** proceeds to **1308**.

At **1308**, a target is lased and a full value crosswind is computed. Additionally, temperature, pressure, humidity, inclination angle, direction-of-fire, and latitude parameters are measured. In some implementations, more or less parameters are measured. From **1308**, method **1300** proceeds to **1310**.

At **1310**, elevation and windage holds are displayed to the weapon operator/assistant spotter. From **1310**, method **1300** proceeds to **1312**.

At **1312**, the weapon operator holds or dials the rifle scope to displayed elevation and windage values. From **1312**, method **1300** proceeds to **1314**.

At **1314**, the weapon operator engages the target. From **1314**, method **1300** stops.

Implementations of the subject matter and the functional operations described in this specification can be implemented in digital electronic circuitry, in tangibly-embodied computer software or firmware, in computer hardware, including the structures disclosed in this specification and their structural equivalents, or in combinations of one or more of them. Implementations of the subject matter described in this specification can be implemented as one or more computer programs, i.e., one or more modules of computer program instructions encoded on a tangible, non-transitory computer-storage medium for execution by, or to control the operation of, data processing apparatus. Alternatively or in addition, the program instructions can be encoded on an artificially-generated propagated signal, e.g., a machine-generated electrical, optical, or electromagnetic signal that is generated to encode information for transmission to suitable receiver apparatus for execution by a data processing apparatus. The computer-storage medium can be a machine-readable storage device, a machine-readable storage substrate, a random or serial access memory device, or a combination of one or more of them.

The term "data processing apparatus" refers to data processing hardware and encompasses all kinds of apparatus, devices, and machines for processing data, including by way of example, a programmable processor, a computer, or multiple processors or computers. The apparatus can also be or further include special purpose logic circuitry, e.g., a central processing unit (CPU), a FPGA (field programmable gate array), or an ASIC (application-specific integrated circuit). In some implementations, the data processing apparatus and/or special purpose logic circuitry may be hardware-based and/or software-based. The apparatus can optionally include code that creates an execution environment for computer programs, e.g., code that constitutes processor firmware, a protocol stack, a database management system, an operating system, or a combination of one or more of them. The present disclosure contemplates the use of data processing apparatuses with or without conventional operating systems, for example LINUX, UNIX, WINDOWS, MAC OS, ANDROID, IOS or any other suitable conventional operating system.

A computer program, which may also be referred to or described as a program, software, a software application, a module, a software module, a script, or code, can be written in any form of programming language, including compiled or interpreted languages, or declarative or procedural languages, and it can be deployed in any form, including as a stand-alone program or as a module, component, subroutine, or other unit suitable for use in a computing environment. A computer program may, but need not, correspond to a file in a file system. A program can be stored in a portion of a file that holds other programs or data, e.g., one or more scripts stored in a markup language document, in a single file dedicated to the program in question, or in multiple coordinated files, e.g., files that store one or more modules, sub-programs, or portions of code. A computer program can be deployed to be

executed on one computer or on multiple computers that are located at one site or distributed across multiple sites and interconnected by a communication network. While portions of the programs illustrated in the various figures are shown as individual modules that implement the various features and functionality through various objects, methods, or other processes, the programs may instead include a number of submodules, third-party services, components, libraries, and such, as appropriate. Conversely, the features and functionality of various components can be combined into single components as appropriate.

The processes and logic flows described in this specification can be performed by one or more programmable computers executing one or more computer programs to perform functions by operating on input data and generating output. The processes and logic flows can also be performed by, and apparatus can also be implemented as, special purpose logic circuitry, e.g., a CPU, a FPGA, or an ASIC.

Computers suitable for the execution of a computer program can be based on general or special purpose microprocessors, both, or any other kind of CPU. Generally, a CPU will receive instructions and data from a read-only memory (ROM) or a random access memory (RAM) or both. The essential elements of a computer are a CPU for performing or executing instructions and one or more memory devices for storing instructions and data. Generally, a computer will also include, or be operatively coupled to, receive data from or transfer data to, or both, one or more mass storage devices for storing data, e.g., magnetic, magneto-optical disks, or optical disks. However, a computer need not have such devices. Moreover, a computer can be embedded in another device, e.g., a mobile telephone, a personal digital assistant (PDA), a mobile audio or video player, a game console, a global positioning system (GPS) receiver, or a portable storage device, e.g., a universal serial bus (USB) flash drive, to name just a few.

Computer-readable media (transitory or non-transitory, as appropriate) suitable for storing computer program instructions and data include all forms of non-volatile memory, media and memory devices, including by way of example semiconductor memory devices, e.g., erasable programmable read-only memory (EPROM), electrically-erasable programmable read-only memory (EEPROM), and flash memory devices; magnetic disks, e.g., internal hard disks or removable disks; magneto-optical disks; and CD-ROM, DVD+/−R, DVD-RAM, and DVD-ROM disks. The memory may store various objects or data, including caches, classes, frameworks, applications, backup data, jobs, web pages, web page templates, database tables, repositories storing business and/or dynamic information, and any other appropriate information including any parameters, variables, algorithms, instructions, rules, constraints, or references thereto. Additionally, the memory may include any other appropriate data, such as logs, policies, security or access data, reporting files, as well as others. The processor and the memory can be supplemented by, or incorporated in, special purpose logic circuitry.

To provide for interaction with a user, implementations of the subject matter described in this specification can be implemented on a computer having a display device, e.g., a CRT (cathode ray tube), LCD (liquid crystal display), or plasma monitor, for displaying information to the user and a keyboard and a pointing device, e.g., a mouse, trackball, or trackpad by which the user can provide input to the computer. Input may also be provided to the computer using a touchscreen, such as a tablet computer surface with pressure sensitivity, a multi-touch screen using capacitive or electric sensing, or other type of touchscreen. Other kinds of devices can be used to provide for interaction with a user as well; for example, feedback provided to the user can be any form of sensory feedback, e.g., visual feedback, auditory feedback, or tactile feedback; and input from the user can be received in any form, including acoustic, speech, or tactile input. In addition, a computer can interact with a user by sending documents to and receiving documents from a device that is used by the user; for example, by sending web pages to a web browser on a user's client device in response to requests received from the web browser.

The term "graphical user interface," or GUI, may be used in the singular or the plural to describe one or more graphical user interfaces and each of the displays of a particular graphical user interface. Therefore, a GUI may represent any graphical user interface, including but not limited to, a web browser, a touch screen, or a command line interface (CLI) that processes information and efficiently presents the information results to the user. In general, a GUI may include a plurality of user interface (UI) elements, some or all associated with a web browser, such as interactive fields, pull-down lists, and buttons operable by the business suite user. These and other UI elements may be related to or represent the functions of the web browser.

Implementations of the subject matter described in this specification can be implemented in a computing system that includes a back-end component, e.g., as a data server, or that includes a middleware component, e.g., an application server, or that includes a front-end component, e.g., a client computer having a graphical user interface or a Web browser through which a user can interact with an implementation of the subject matter described in this specification, or any combination of one or more such back-end, middleware, or front-end components. The components of the system can be interconnected by any form or medium of wireline and/or wireless digital data communication, e.g., a communication network. Examples of communication networks include a local area network (LAN), a radio access network (RAN), a metropolitan area network (MAN), a wide area network (WAN), Worldwide Interoperability for Microwave Access (WIMAX), a wireless local area network (WLAN) using, for example, 802.11a/b/g/n and/or 802.20, all or a portion of the Internet, and/or any other communication system or systems at one or more locations. The network may communicate with, for example, Internet Protocol (IP) packets, Frame Relay frames, Asynchronous Transfer Mode (ATM) cells, voice, video, data, and/or other suitable information between network addresses.

The computing system can include clients and servers. A client and server are generally remote from each other and typically interact through a communication network. The relationship of client and server arises by virtue of computer programs running on the respective computers and having a client-server relationship to each other.

In some implementations, any or all of the components of the computing system, both hardware and/or software, may interface with each other and/or the interface using an application programming interface (API) and/or a service layer. The API may include specifications for routines, data structures, and object classes. The API may be either computer language independent or dependent and refer to a complete interface, a single function, or even a set of APIs. The service layer provides software services to the computing system. The functionality of the various components of the computing system may be accessible for all service consumers via this service layer. Software services provide reusable, defined business functionalities through a defined interface. For example, the interface may be software written in JAVA, C++,

or other suitable language providing data in extensible markup language (XML) format or other suitable format. The API and/or service layer may be an integral and/or a stand-alone component in relation to other components of the computing system. Moreover, any or all parts of the service layer may be implemented as child or sub-modules of another software module, enterprise application, or hardware module without departing from the scope of this disclosure.

While this specification contains many specific implementation details, these should not be construed as limitations on the scope of any invention or on the scope of what may be claimed, but rather as descriptions of features that may be specific to particular implementations of particular inventions. Certain features that are described in this specification in the context of separate implementations can also be implemented in combination in a single implementation. Conversely, various features that are described in the context of a single implementation can also be implemented in multiple implementations separately or in any suitable sub-combination. Moreover, although features may be described above as acting in certain combinations and even initially claimed as such, one or more features from a claimed combination can in some cases be excised from the combination, and the claimed combination may be directed to a sub-combination or variation of a sub-combination.

Similarly, while operations are depicted in the drawings in a particular order, this should not be understood as requiring that such operations be performed in the particular order shown or in sequential order, or that all illustrated operations be performed, to achieve desirable results. In certain circumstances, multitasking and parallel processing may be advantageous. Moreover, the separation and/or integration of various system modules and components in the implementations described above should not be understood as requiring such separation and/or integration in all implementations, and it should be understood that the described program components and systems can generally be integrated together in a single software product or packaged into multiple software products.

Particular implementations of the subject matter have been described. Other implementations, alterations, and permutations of the described implementations are within the scope of the following claims as will be apparent to those skilled in the art. Accordingly, the above description of example implementations does not define or constrain this disclosure. Other changes, substitutions, and alterations are also possible without departing from the spirit and scope of this disclosure.

What is claimed is:

1. A device for optically measuring crosswind, comprising:

a laser transmitter adapted to generate a laser to illuminate a path through an atmosphere;

a plurality of receivers, each receiver comprising a single-pixel photodiode coupled with distinct optics and adapted to analyze the path of the laser through the atmosphere, each receiver spaced apart from other receivers at a known particular distance, each receiver receiving a scintillation pattern created by atmospheric eddies diffracting and refracting scattered laser radiation, and, for each receiver, converting the received scintillation pattern into a single data point measuring cumulative light intensity; and

the device adapted to compare cumulative light intensities from each receiver and to generate a crosswind profile along the path of the laser.

2. The device of claim **1**, further comprising another receiver spaced apart from the plurality of receivers at a known particular distance and in a direction perpendicular to the plurality of receivers.

3. The device of claim **2**, wherein the device is adapted to provide multi-axis scintillation pattern movement determinations.

4. The device of claim **1**, wherein the optics further comprise micro optics coupled with diaphragms that selectively permit illumination of different parts of a particular single-pixel photodiode.

5. The device of claim **1**, wherein a particular single-pixel photodiode is a quadrant photodetector.

6. The device of claim **1**, wherein the receiver further comprises collection optics used to optically filter or isolate, using at least one of polarization or diffraction techniques, the scattered laser radiation in the atmosphere.

7. The device of claim **1**, wherein the laser transmitter is one of a light emitting diode (LED), a super-luminescent diode (SLED), a liquid laser, a gas laser, or a solid laser.

8. The device of claim **1**, wherein the laser transmitter is adapted to emit a laser of differing power, frequency, or optical property.

9. The device of claim **1**, further comprising:

a memory configured to hold the generated crosswind profile; and

a processor interoperably coupled to the memory and configured to calculate a ballistic solution using the generated crosswind profile.

10. The device of claim **9**, further comprising the processor configured to initiate transmission of data associated with the ballistic solution to a sighting device.

11. The device of claim **1**, wherein the laser illuminates a target that reflects laser radiation back to the plurality of receivers.

12. A device for optically measuring a cross-movement profile within a medium, comprising:

a plurality of receivers spaced apart from other receivers at a known particular distance, each receiver comprising a single-pixel photodiode coupled with distinct optics and adapted to analyze a path of a laser through a medium, each receiver adapted to receive from a substantially common direction and, over time, a plurality of snapshots of a moving scintillation pattern created by eddies in the medium due to temperature gradients diffracting and refracting scattered laser radiation, and for each receiver, converting each received snapshot into a single data point measuring cumulative light intensity; and

the device adapted to compare cumulative light intensities from each receiver and to generate a cross-movement profile within the medium, the generation of the cross-movement profile a function of the particular spacing between, and a size of, each of the plurality of receivers.

13. The device of claim **12**, wherein the medium is one of a liquid or a gas.

14. The device of claim **12**, further comprising a radiation emitter.

15. The device of claim **12**, further comprising:

a memory configured to hold the generated cross-movement profile within the medium; and

a processor interoperably coupled to the memory and configured to calculate a ballistic solution using the generated cross-movement profile within the medium.

16. The device of claim **12**, wherein the laser illuminates a target that reflects laser radiation back to the plurality of receivers.

17. A method for measuring cross-movement within a medium for medium-profiling purposes, comprising:

projecting radiation into a medium to illuminate a path through the medium;

receiving, over time, with a photodetector receiver of a plurality of photodetector receivers, a plurality of scintillation patterns, each scintillation pattern created by eddies in the medium diffracting and refracting scattered radiation, each photodetector receiver spaced apart from other photodetector receivers at a known particular distance, and each photodetector receiver comprising a single-pixel photodiode coupled with distinct optics;

for each photodetector receiver, converting each received scintillation pattern into a single data point measuring cumulative radiation intensity;

comparing the cumulative radiation intensity for each received scintillation pattern of the received plurality of scintillation patterns; and

calculating a cumulative weighted average cross-movement within the medium along the path using the compared cumulative radiation intensities.

18. The method of claim 17, wherein the medium is one of a liquid or a gas.

19. The method of claim 17, further comprising:

calculating a ballistic solution for a projectile using at least the calculated cumulative weighted average cross-movement within the medium; and

calculating a weapon aiming offset using the calculated ballistic solution.

20. The method of claim 17, further comprising:

determining that a particular scintillation pattern is moving;

determining a direction-of-movement for the particular scintillation pattern; and

determining a speed-of-movement for the particular scintillation pattern.

21. The method of claim 20, wherein the determination that the particular scintillation pattern is moving is performed by a cross-covariance computation between two or more scintillation patterns.

22. The method of claim 20, further comprising providing a multi-axis scintillation pattern movement determination.

23. The method of claim 17, wherein the laser illuminates a target that reflects radiation back to the plurality of receivers.

* * * * *